cascade connection upto 16 boilers superior safety systems high efficiency condensing boilers 110% seasonal efficiency DIN 4708-2
hot water temperature safety over 95 Coenvironmental friendly high modulation ration low flue gas temperature
42kW to 3100kW capacity range fully automatic operation control and operation over the internet with web-server NOx class 6
EAC, SELO, CE certified compact design – high efficiency automatic frost protection function

Gassero

technology for your comfort

Lumela
Moni
Goudendai
GUUTENTAKH
HALO
ALUU
KONNICHIWA
ANNYEONGHASHIPKIKKA
MARABA
Moin
ZDRAVO
NEIHOU
PAIVAA
BOK
CIAO
ASSALAAMSALAIKUM
TADIYALA
GODAM
DOEDEI
Servus
OSIYO
HALITO
TJIKE
Haai
SANNU
BON
VITAYU
PAREV
ALOHA
TOUS
AINNGAI
GUUNDACH
WERTE
HEJ
AHOJ
HEEBEE
TEANASTE
MANDI
SELAM
HOLA
SALUTE
SALAM
BONJOUR
Griasgood
Gassero
technology for your comfort
INUUGUJOQ
TERVIST
DIA
NAMASTE
CARAM
Scervusz
KAIXO
Buenas
Nibula
HALLO
BAREV
TERE
Ile
SALUD
Bundi
Prahham
KIAORA
GOEDEDAG
OLA
BONJOU
TERVE
YA
Saluton
SALEM
Salam
BULA
MITOJZE
Selamat
MARHABAN
SALUTO
GUTENTAG
HALAUGIKPIN

Ultrabox FireTube 210-510 kW

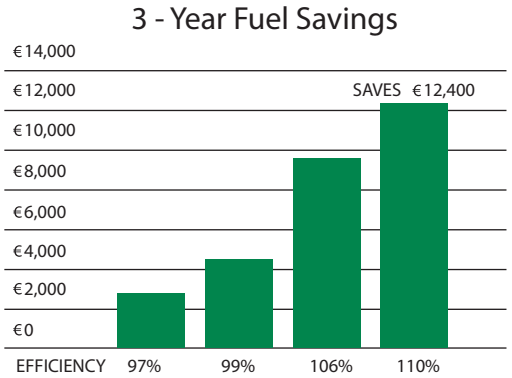

A penny saved is a penny earned

What if we woult tell you that Ultrabox is the most efficient boiler in it's class? It operates on wide range of flow rates with low pressure drop.

Stainless Heat Exchanger

Cutting Edge Fire Tube Design

%110 Annual Average Efficiency

Incredible automation. Bult-in

Upto 16 boilers cascade sequencing with no extra equipment needed. In addition to one heating circle and DHW, each boiler controls upto 3 additional heat circles (zone control).
Automatic frost protection, built-in time program per each day of the week, weekdays, weeks or weekends. Just set and forget.

Smallest Footprint 0,70 m²

Safe and reliable

Each boiler is equipped with state of the art technology available today.
Every second 9 sensors are monitoring boiler's operation feeding data to 31 safety subsystems.

GAR 2016/426

NOx CLASS 6

1:8 Modulation Ratio

34 mg/kW NOx

11bar Max. Pressure

Total controll across the Globe

Keeps you in complete control across the country or across the world thanks to the web-server connectivity feature.

16 Boiler Cascade Sequencing

Installers best friend

Unparalleled installation flexibility. With zero side clearance the installed footprint is upto 30% smaller than competitive boilers.

ΔT = 40°C

Gassero technology for your comfort	ULTRABOX 210		ULTRABOX 255		ULTRABOX 420		ULTRABOX 465		ULTRABOX 510	
	min.	maks.	min.	maks.	min.	maks.	min.	maks.	min.	maks.
Nominal Heat Output Pn at (80/60°C)	29.54	194.15	34.14	232.47	59.08	388.30	63.68	426.62	68.28	464.94
Nominal Heat Output Pn at (50/30°C)	32.61	212.13	37.74	256.52	65.22	424.26	70.35	468.65	75.48	513.04
Turndown Ratio	1:7		1:7		1:7		1:7		1:7	
Heating Efficiency (80/60°C)	97.47	97.9	97.5	97.8	97.47	97.9	97.485	97.85	97.5	97.8
Heating Efficiency (50/30°C)	107.22	107	107.26	107.03	107.22	107	107.24	107.015	107.26	107.03
Partial Load, Return 30°C (direct Method)	108.38		108.41		108.38		108.395		108.41	
NOx Class	6		6		6		6		6	

Ultrabox FireTube 210-510 kW

Ultrabox 210/255

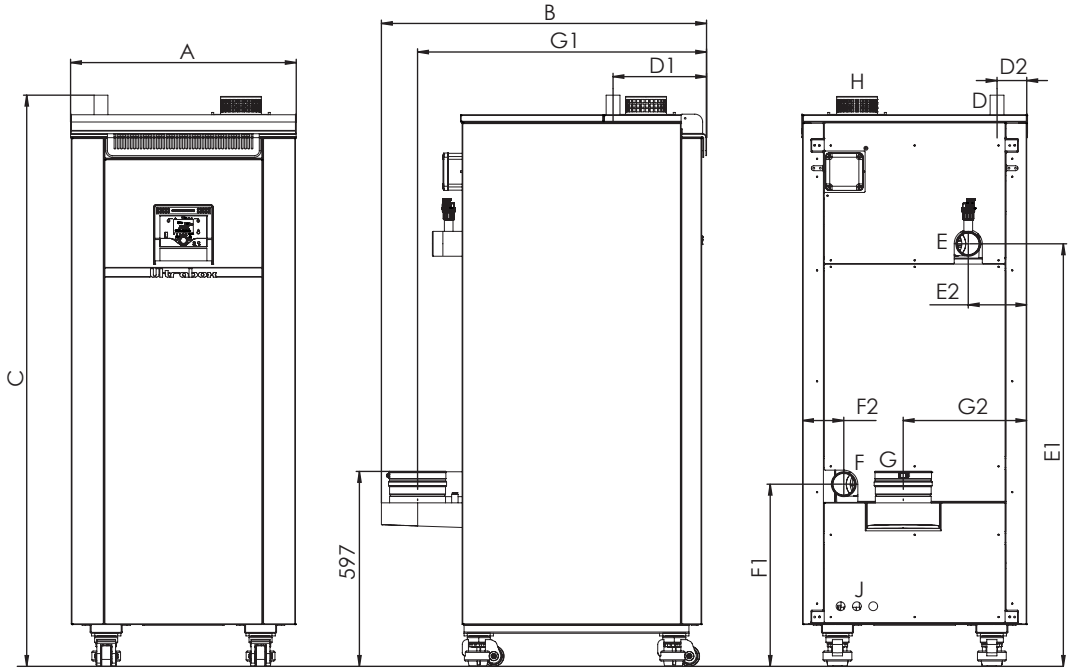

Ultrabox 420/465/510

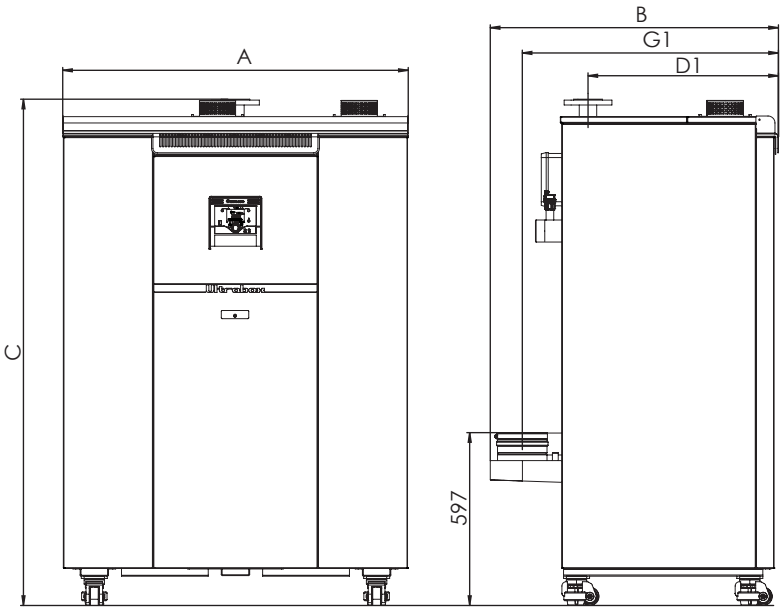

	ULTRABOX 210	ULTRABOX 255	ULTRABOX 420	ULTRABOX 465	ULTRABOX 510
A (Width)	691mm	691mm	1190mm	1190mm	1190mm
B (Length)	995mm	995mm	995mm	995mm	995mm
C (Height)	1750mm	1750mm	1750mm	1750mm	1750mm
D (Gas inlet)	1 1/4"	1 1/4"	DN50	DN50	DN50
D1	286mm	286mm	658mm	658mm	658mm
D2	91mm	91mm	595mm	595mm	595mm
E (Water outlet conn.)	2 1/2"	2 1/2"	2 1/2"	2 1/2"	2 1/2"
E1	1295mm	1295mm	1295mm	1295mm	1295mm
E2	180mm	180mm	104mm	104mm	104mm
F (Water inlet conn.)	2 1/2"	2 1/2"	2 1/2"	2 1/2"	2 1/2"
F1	557mm	557mm	557mm	557mm	557mm
F2	126mm	126mm	485mm	485mm	485mm
G (Flue diamter)	Ø170mm	Ø170mm	Ø170mm	Ø170mm	Ø170mm
G1	885mm	885mm	885mm	885mm	885mm
G2	378mm	378mm	303mm	303mm	303mm
H (Air intake)	Ø100mm	Ø100mm	Ø100mm	Ø100mm	Ø100mm
J (Condensate drain)	Ø25mm	Ø25mm	Ø25mm	Ø25mm	Ø25mm

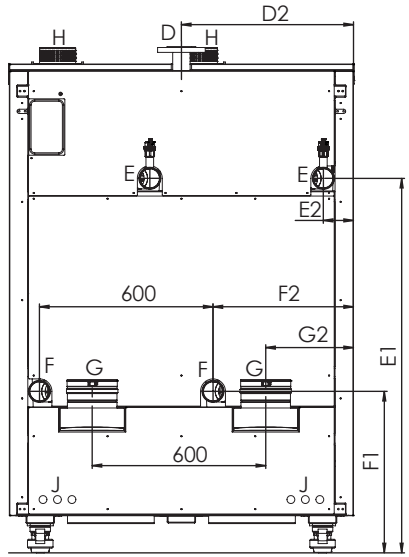

export@gassero.com

Ultrabox 1125 kW

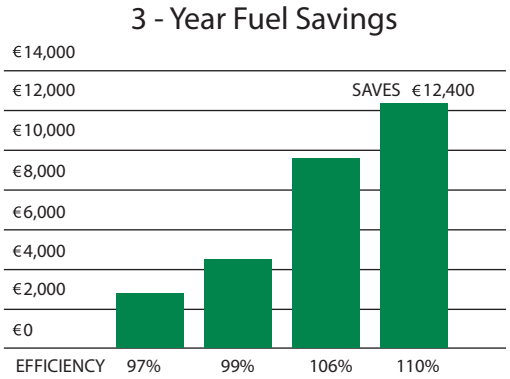

A penny saved is a penny earned

What if we woult tell you that Ultrabox is the most efficient boiler in it's class? It operates on wide range of flow rates with low pressure drop.

Stainless Heat Exchanger

Smallest Footprint 1,8 m²

%110 Annual Average Efficiency

1:9 Modulation Ratio

11bar Max. Pressure

16 Boiler Cascade Sequencing

ΔT = 40°C

Incredible automation. Bult-in

Upto 16 boilers cascade sequencing with no extra equipment needed. In addition to one heating circle and DHW, each boiler controls upto 3 additional heat circles (zone control).
Automatic frost protection, built-in time program per each day of the week, weekdays, weeks or weekends. Just set and forget.

GAR 2016/426

NOx CLASS 6

Safe and reliable

Each boiler is equipped with state of the art technology available today.
Every second 9 sensors are monitoring boiler's operation feeding data to 31 safety subsystems.

Total controll across the Globe

Keeps you in complete control across the country or across the world thanks to the web-server connectivity feature.

Installers best friend

Unparalleled installation flexibility. With zero side clearance the installed footprint is upto 30% smaller than competitive boilers.

Gassero technology for your comfort	ULTRABOX 1125	
	min.	maks.
Nominal Heat Output Pn at (80/60°C)	112.88	1037.36
Nominal Heat Output Pn at (50/30°C)	123.23	1116.42
Turndown Ratio	1:9	
Heating Efficiency (80/60°C)	97.47	96.96
Heating Efficiency (50/30°C)	107.19	106.15
Partial Load, Return 30°C (direct Method)	107.4	
NOx Class	6	

Ultrabox **1125 kW**

Ultrabox 1125

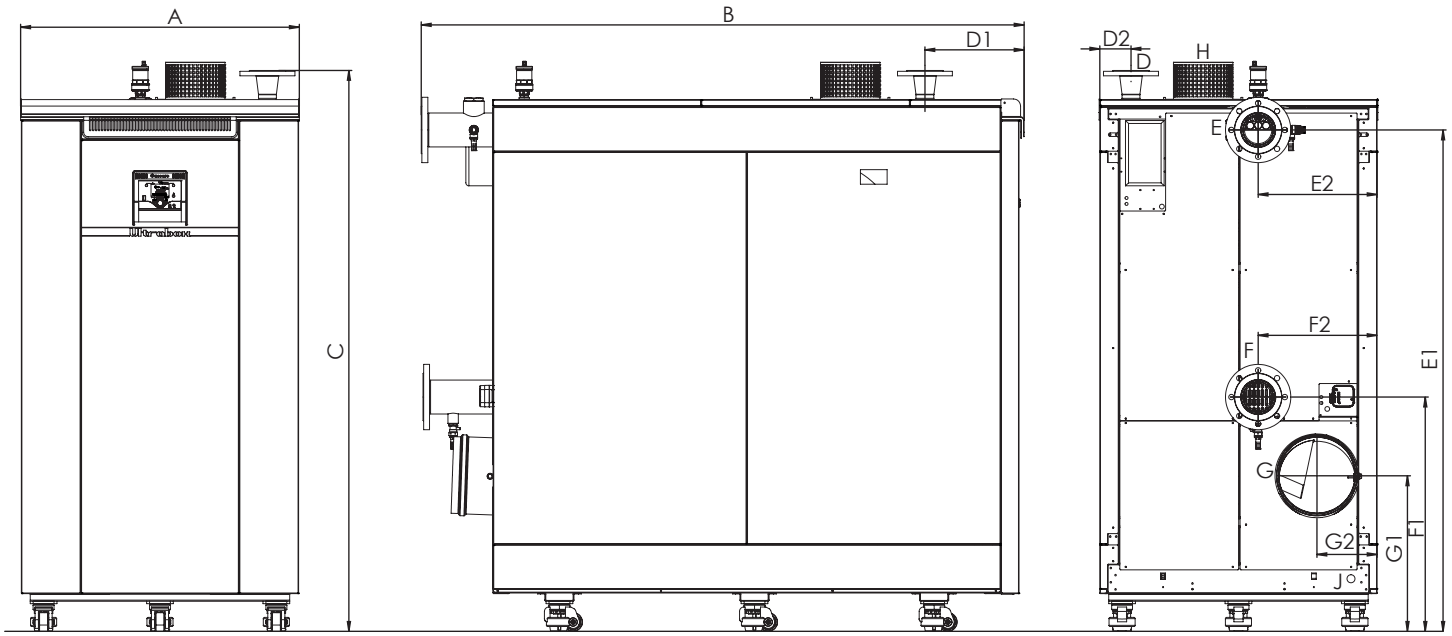

	ULTRABOX 1125
A (Width)	935 mm
B (Length)	2030 mm
C (Height)	1875mm
D (Gas inlet)	DN65
D1	334mm
D2	105mm
E (Water outlet conn.)	DN100
E1	1687mm
E2	401mm
F (Water inlet conn.)	DN100
F1	787mm
F2	401mm
G (Flue diamter)	Ø250mm
G1	524mm
G2	203mm
H (Air intake)	Ø200mm
J (Condensate drain)	Ø25mm

export@gassero.com

Alubox 70-2200 kW

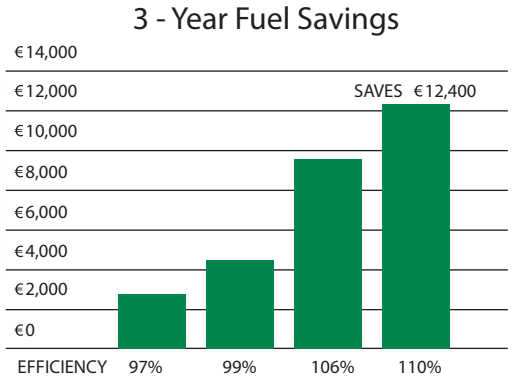

A penny saved is a penny earned

What if we woult tell you that Alubox is the most efficient boiler in it's class? It operates on wide range of flow rates with low pressure drop.

Aluminium Heat Exchanger

Smallest Footprint **1,8 m²**

%110 Annual Average Efficiency

Incredible automation. Bult-in

Upto 16 boilers cascade sequencing with no extra equipment needed. In addition to one heating circle and DHW, each boiler controls upto 3 additional heat circles (zone control).

Automatic frost protection, built-in time program per each day of the week, weekdays, weeks or weekends. Just set and forget.

1:7 Modulation Ratio

7bar Max. Pressure

GAR 2016/426

NOx CLASS 6

Safe and reliable

Each boiler is equipped with state of the art technology available today.

Every second 9 sensors are monitoring boiler's operation feeding data to 31 safety subsystems.

ΔT = 40°C

Total controll across the Globe

Keeps you in complete control across the country or across the world thanks to the web-server connectivity feature.

16 Boiler Cascade Sequencing

Installers best friend

Unparalleled installation flexibility. With zero side clearance the installed footprint is upto 30% smaller than competitive boilers.

Gassero technology for your comfort	ALUBOX 70		ALUBOX 115		ALUBOX 150		ALUBOX 208		ALUBOX 290		ALUBOX 540		ALUBOX 700		ALUBOX 1100		ALUBOX 2200	
	min.	maks.	min.	maks.	min.	maks.	min.	maks.	min.	maks.	min.	maks.	min.	maks.	min.	maks.	min.	maks.
Nominal Heat Output Pn at (80/60°C)	9.9	63.4	14.3	109.5	19.2	139.8	34.5	195.02	46.7	274.1	79.1	502.9	97.8	643.1	146	1001.8	292	2003.6
Nominal Heat Output Pn at (50/30°C)	11.6	68.5	15.1	118.1	22.3	149.1	36.7	207.9	51.4	286.2	84.7	539.2	107.8	708.4	160.7	1107.6	321.4	2215.2
Turndown Ratio	1:6		1:8		1:7		1:6		1:6		1:6		1:7		1:7		1:7	
Heating Efficiency (80/60°C)	96.69	97.22	96.79	98.16	97.03	98.19	97.7	97.6	97.3	97.9	96.6	97.3	96.5	97.3	97	97.3	97	97.3
Heating Efficiency (50/30°C)	107.98	103.88	108.19	104.79	108.14	103.22	103.2	104	107.5	103.8	105	104	107	107.4	107.1	107	107.1	107
Partial Load, Return 30°C (direct Method)	108.39		108.65		108.37		107.4		107.3		106.7		108.6		108.6		108	
NOx Class	6		6		6		6		6		6		6		6		6	

Alubox **70-2200 kW**

Alubox 70/115/150

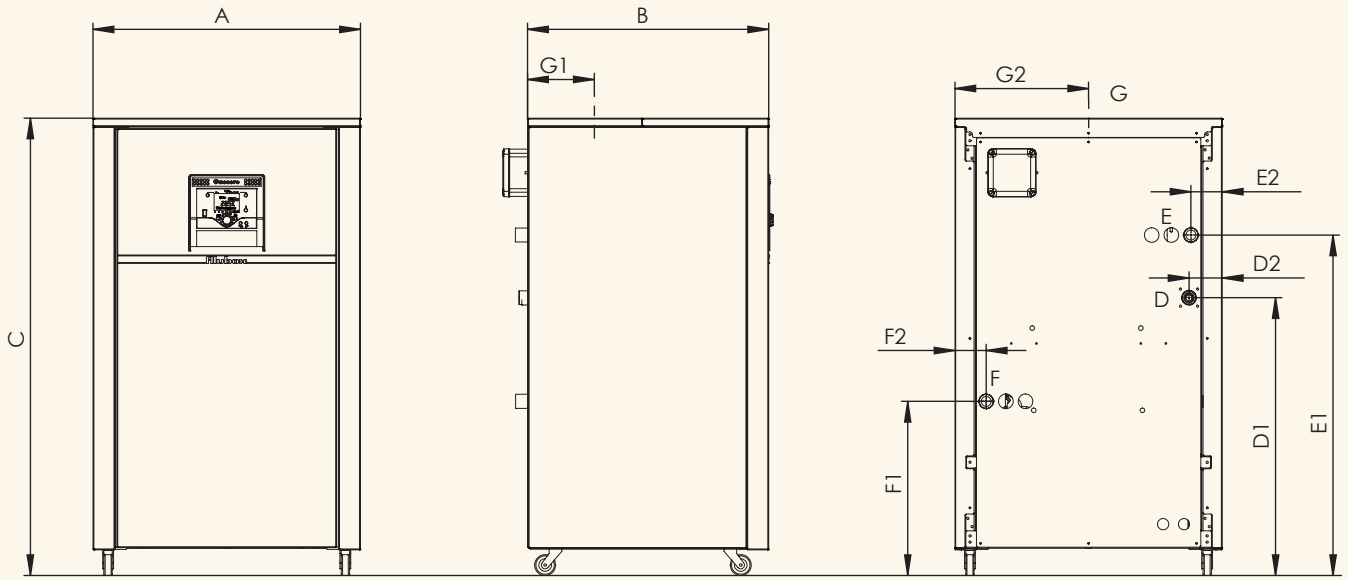

Alubox 208/290

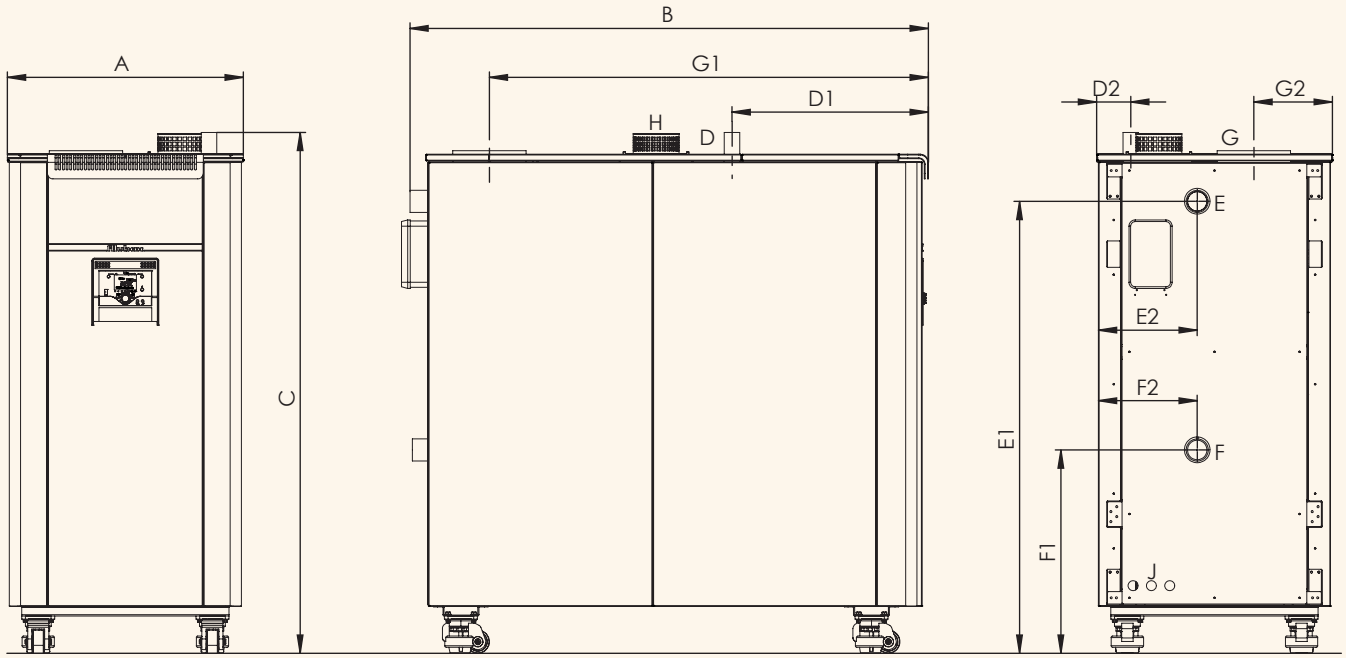

export@gassero.com

Alubox 540/700

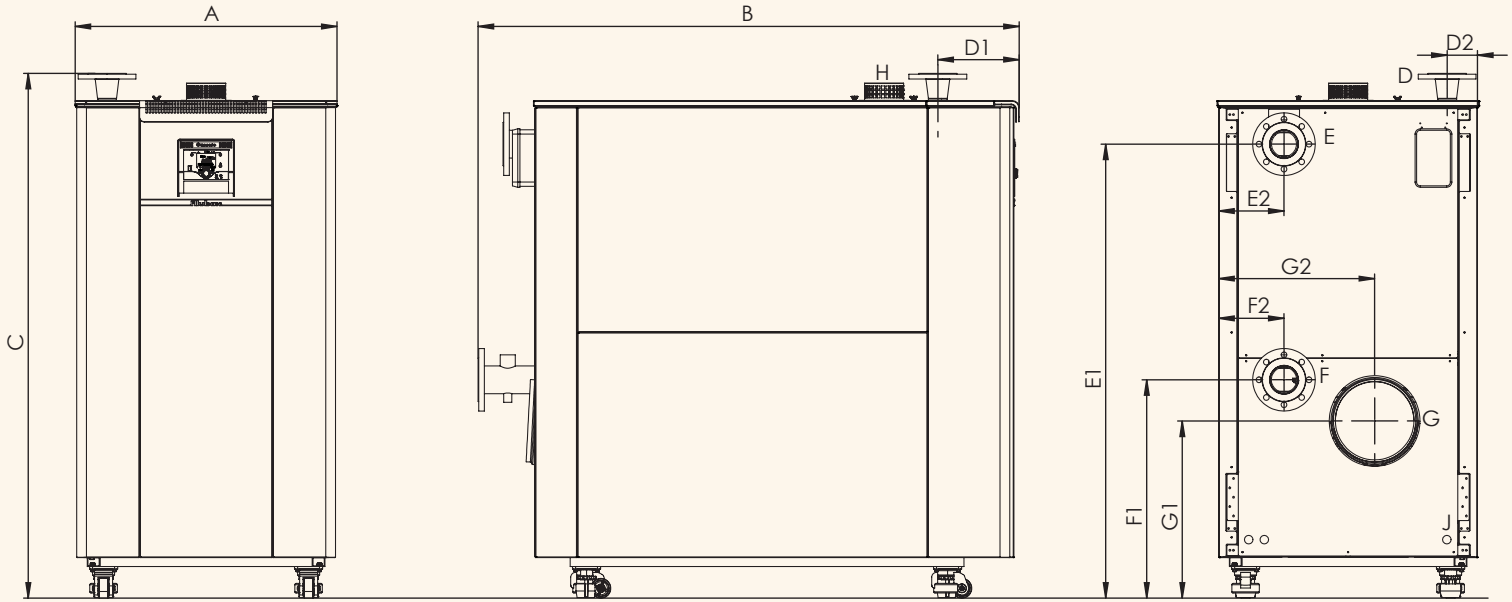

	ALUBOX 70	ALUBOX 115	ALUBOX 150	ALUBOX 208	ALUBOX 290	ALUBOX 540	ALUBOX 700
A (Width)	640mm	640mm	640mm	645mm	645mm	838mm	838mm
B (Length)	575mm	575mm	575mm	1420mm	1420mm	1731mm	1731mm
C (Height)	1095mm	1095mm	1095mm	1420mm	1420mm	1680mm	1680mm
D (Gas inlet)	3/4"	1"	1"	1 1/4"	1 1/4"	DN65(PN16)	DN65(PN16)
D1	665mm	665mm	665mm	535mm	535mm	260mm	260mm
D2	80mm	80mm	80mm	93mm	93mm	97mmm	97mmm
E (Water outlet conn.)	1"	1"	1"	2"	2"	DN80(PN16)	DN80(PN16)
E1	815mm	815mm	815mm	1233mm	1233mm	1453mm	1453mm
E2	169mm	122mm	75mm	269mm	269mm	209mm	209mm
F (Water inlet conn.)	1"	1"	1"	2"	2"	DN80(PN16)	DN80(PN16)
F1	417mm	417mm	417mm	555mm	555mm	699mm	699mm
F2	169mm	122mm	75mm	269mm	269mm	209mm	209mm
G (Flue diamter)	Ø100/150mm	Ø100/150mm	Ø100/150mm	Ø200mm	Ø200mm	Ø250mm	Ø250mm
G1	160mm	160mm	160mm	1197mm	1197mm	566mm	566mm
G2	320mm	320mm	320mm	214mm	214mm	500mm	500mm
H (Air intake)	Ø80mm	Ø110mm	Ø110mm	Ø110mm	Ø110mm	Ø125mm	Ø125mm
J (Condensate drain)	Ø25mm	Ø25mm	Ø25mm	Ø25mm	Ø25mm	Ø25mm	Ø25mm

Alubox **70-2200 kW**

Alubox 1100

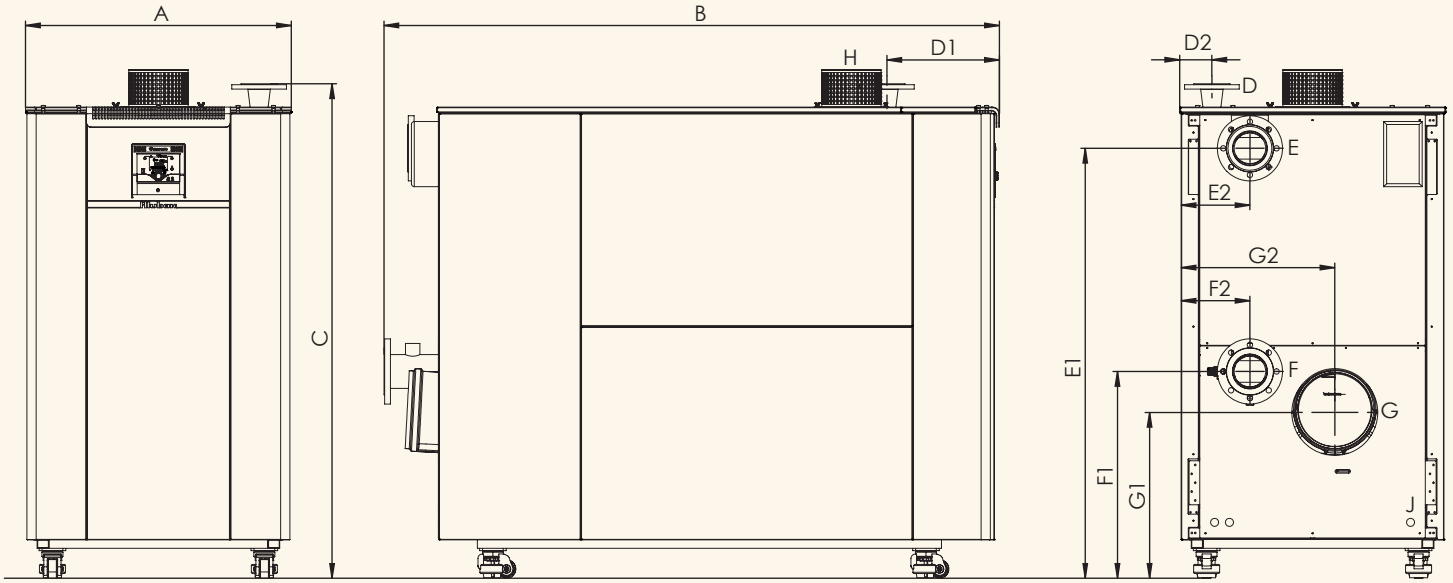

	ALUBOX 1100	ALUBOX 2200
A (Width)	898mm	1738mm
B (Length)	2079mm	2079mm
C (Height)	1670mm	1670mm
D (Gas inlet)	DN65(PN16)	DN65(PN16)
D1	380mm	380mm
D2	109mm	113mm
E (Water outlet conn.)	DN100(PN16)	DN100(PN16)
E1	1453mm	1453mm
E2	232mm	236mm
F (Water inlet conn.)	DN100(PN16)	DN100(PN16)
F1	699mm	699mm
F2	232mm	236mm
G (Flue diamter)	Ø250mm	Ø250mm
G1	570mm	570mm
G2	519mm	523mm
H (Air intake)	Ø200mm	Ø200mm
J (Condensate drain)	Ø25mm	Ø25mm

Alubox 2200

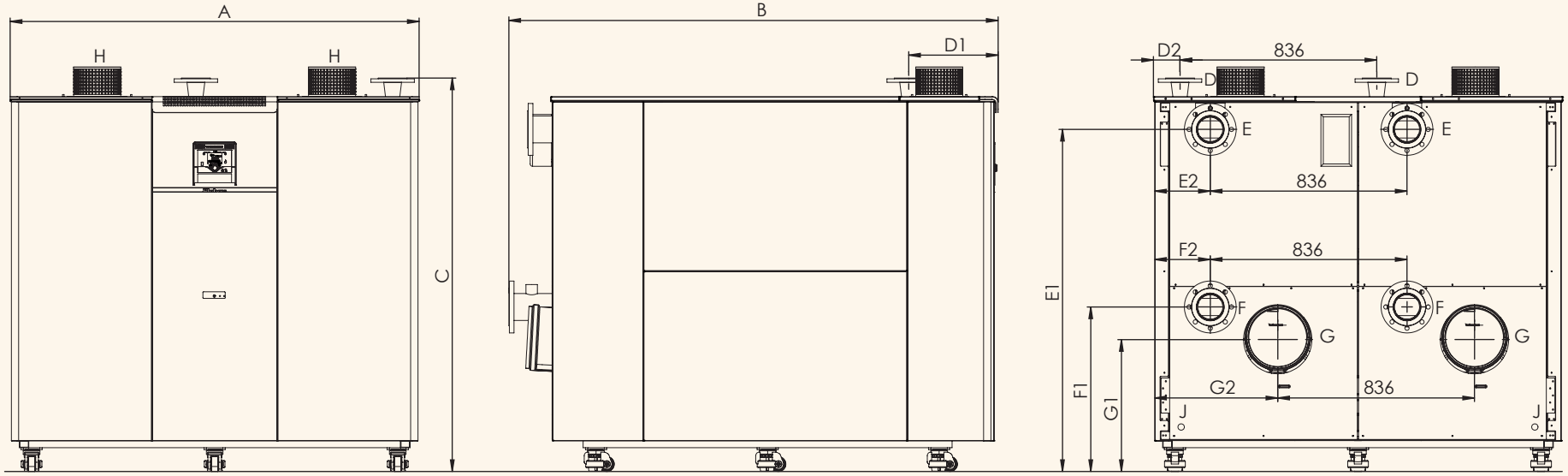

export@gassero.com

Alubox X-treme 250-1065 kW

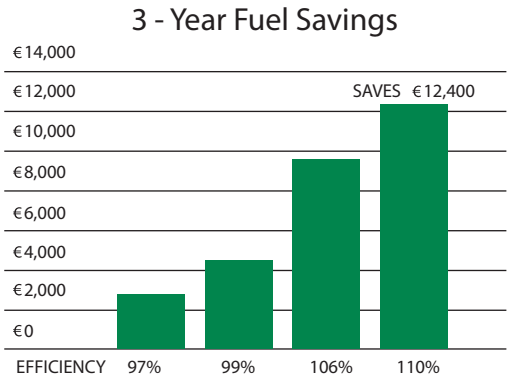

A penny saved is a penny earned

What if we woult tell you that Alubox X-treme is the most efficient boiler in it's class? It operates on wide range of flow rates with low pressure drop.

Aluminium Heat Exchanger

Smallest Footprint **2 m²**

%110 Annual Average Efficiency

Incredible automation. Bult-in

Upto 16 boilers cascade sequencing with no extra equipment needed. In addition to one heating circle and DHW, each boiler controls upto 3 additional heat circles (zone control).
Automatic frost protection, built-in time program per each day of the week, weekdays, weeks or weekends. Just set and forget.

7bar Max. Pressure

GAR 2016/426

NOx CLASS 6

Safe and reliable

Each boiler is equipped with state of the art technology available today.
Every second 9 sensors are monitoring boiler's operation feeding data to 31 safety subsystems.

1:8 Modulation Ratio

16 Boiler Cascade Sequencing

ΔT = 40°C

Total controll across the Globe

Keeps you in complete control across the country or across the world thanks to the web-server connectivity feature.

Gassero (technology for your comfort)	ALUBOX X-TREME 250		ALUBOX X-TREME 300		ALUBOX X-TREME 350		ALUBOX X-TREME 430		ALUBOX X-TREME 535		ALUBOX X-TREME 640		ALUBOX X-TREME LX700		ALUBOX X-TREME 880		ALUBOX X-TREME 1065	
	min.	maks.	min.	maks.	min.	maks.	min.	maks.	min.	maks.	min.	maks.	min.	maks.	min.	maks.	min.	maks.
Heat Output Pn (80/60°C)	46.8	237	46.8	279.5	63.7	328.3	82.5	416	99.9	499.8	73.8	601.4	111.9	650.4	124	824.5	152.9	999.9
Heat Output Pn (50/30°C)	51.4	254	51.4	302	70.2	351.7	91.6	445.9	107.1	540.6	81	641.4	127.6	702	142.3	885.1	171.9	1065.5
Turndown Ratio	1:5		1:6		1:5		1:5		1:5		1:8		1:6		1:6		1:6	
Heating Efficiency (80/60°C)	95.98	98.06	96.06	98.18	96.26	98.04	96.75	97.94	97.11	98.23	96.98	97.91	96.38	97.04	96.79	97.71	96.88	97.65
Heating Efficiency (50/30°C)	108.11	105.25	107.61	106.24	107.06	106.21	107.96	105.03	107.64	106.11	107.47	106.42	108.12	104.82	107.52	104.58	108.18	104.85
Partial Load, Return 30°C	107.64		107.49		107.52		107.56		107.38		107.55		108.76		108.66		108.4	
NOx Class	6		6		6		6		6		6		6		6		6	

Alubox X-treme **250-1065 kW**

Alubox X-Treme 250/300

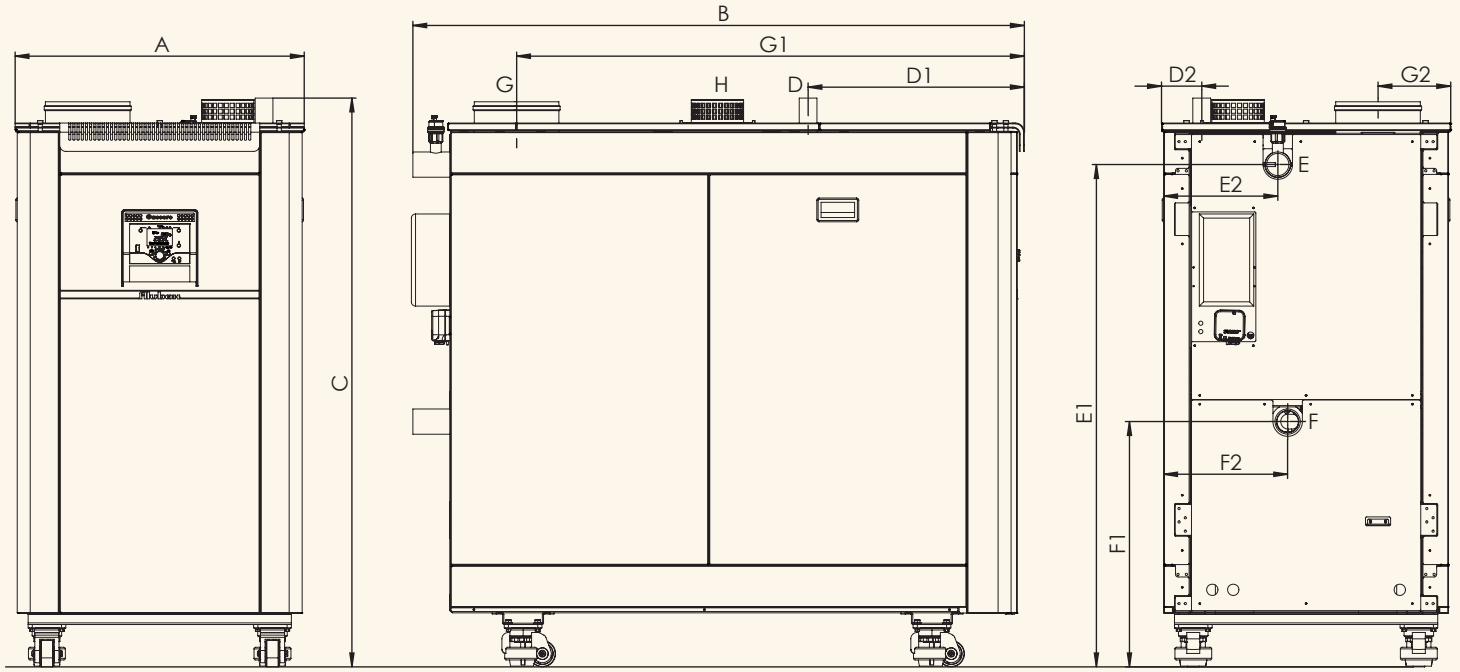

	ALUBOX X-TREME 250	ALUBOX X-TREME 300
A (Width)	690mm	690mm
B (Length)	1460mm	1460mm
C (Height)	1360mm	1360mm
D (Gas inlet)	1 1/4"	1 1/4"
D1	517mm	517mm
D2	96mm	96mm
E (Water outlet conn.)	2"	2"
E1	1200mm	1200mm
E2	273mm	273mm
F (Water inlet conn.)	2"	2"
F1	586mm	586mm
F2	297mm	297mm
G (Flue diamter)	Ø200mm	Ø200mm
G1	1213mm	1213mm
G2	174mm	174mm
H (Air intake)	Ø125	Ø125
J (Condensate drain)	Ø25mm	Ø25mm

export@gassero.com

Alubox X-Treme 350/430/535/640

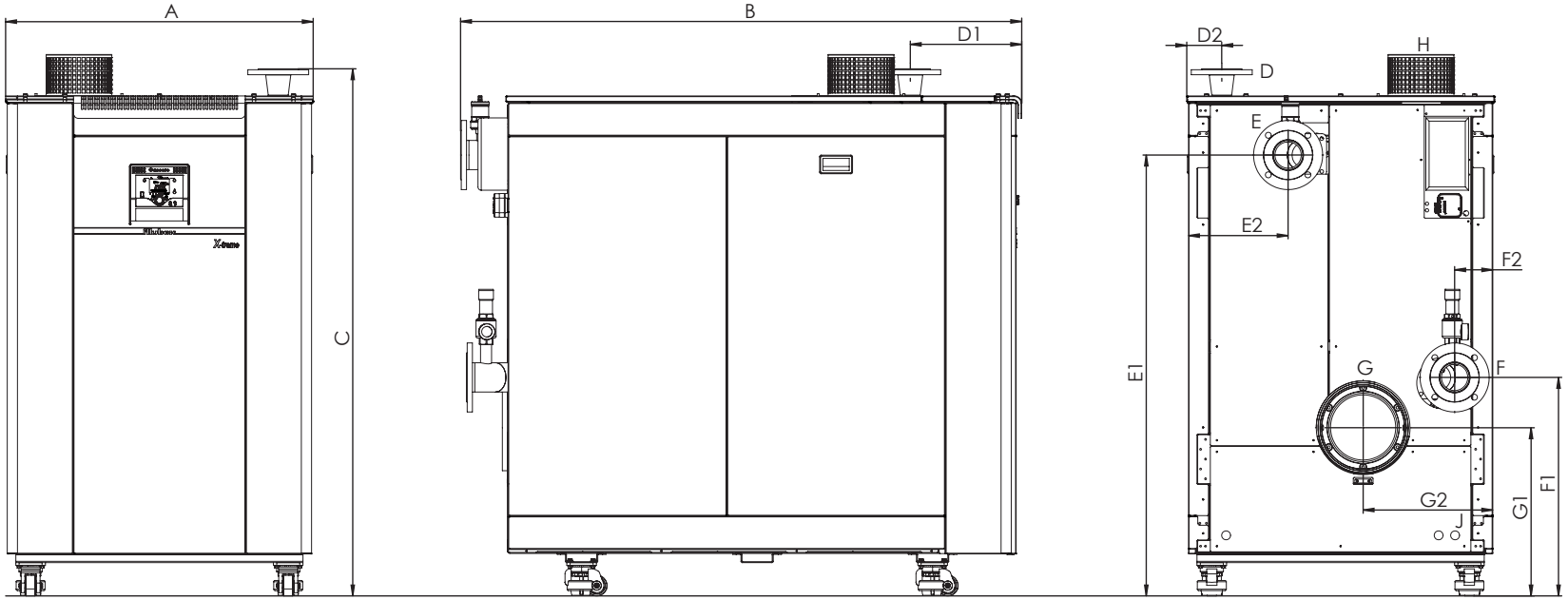

	ALUBOX X-TREME 350	ALUBOX X-TREME 430	ALUBOX X-TREME 535	ALUBOX X-TREME 640
A (Width)	835mm	935mm	935mm	935mm
B (Length)	1220mm	1420mm	1705mm	1705mm
C (Height)	1600mm	1600mm	1600mm	1600mm
D (Gas inlet)	DN50(PN16)	DN65(PN16)	DN65(PN16)	DN65(PN16)
D1	248mm	350mm	542mm	443mm
D2	106mm	106mm	106mm	106mm
E (Water outlet conn.)	DN100(PN6)	DN100(PN6)	DN100(PN6)	DN100(PN6)
E1	1340mm	1340mm	1340mm	1340mm
E2	235mm	300mm	300mm	300mm
F (Water inlet conn.)	DN100(PN6)	DN100(PN6)	DN100(PN6)	DN100(PN6)
F1	664mm	664mm	664mm	664mm
F2	88mm	115mm	115mm	115mm
G (Flue diamter)	Ø250mm	Ø250mm	Ø250mm	Ø250mm
G1	511mm	511mm	511mm	511mm
G2	364mm	394mm	394mm	394mm
H (Air intake)	Ø125mm	Ø200mm	Ø200mm	Ø200mm
J (Condensate drain)	Ø25mm	Ø25mm	Ø25mm	Ø25mm

Alubox X-treme **250-1065 kW**

Alubox X-Treme LX700/880/1065

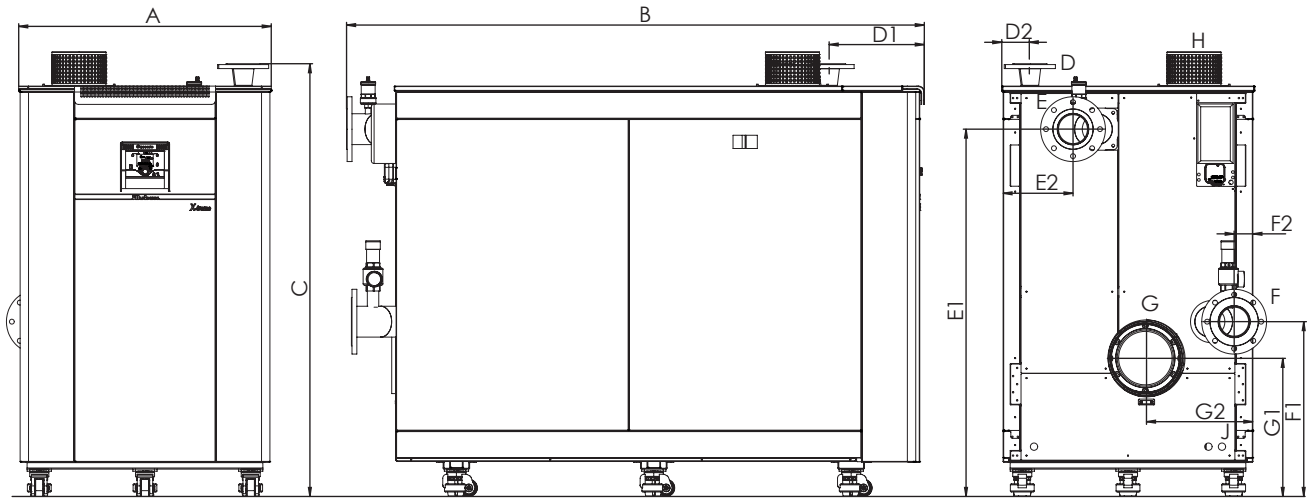

	ALUBOX X-TREME LX700	ALUBOX X-TREME 880	ALUBOX X-TREME 1065
A (Width)	935mm	935mm	935mm
B (Length)	1745mm	2140mm	2140mm
C (Height)	1600mm	1600mm	1600mm
D (Gas inlet)	DN65(PN16)	DN65(PN16)	DN65(PN16)
D1	338mm	543mm	353mm
D2	106mm	106mm	106mm
E (Water outlet conn.)	DN125(PN6)	DN125(PN6)	DN125(PN6)
E1	1360mm	1360mm	1360mm
E2	263mm	263mm	263mm
F (Water inlet conn.)	DN125(PN6)	DN125(PN6)	DN125(PN6)
F1	647mm	647mm	647mm
F2	65mm	65mm	65mm
G (Flue diamter)	Ø250mm	Ø250mm	Ø250mm
G1	511mm	511mm	511mm
G2	394mm	394mm	394mm
H (Air intake)	Ø200mm	Ø200	Ø200
J (Condensate drain)	Ø25mm	Ø25mm	Ø25mm

export@gassero.com

Alubox X-treme 1315-1760 kW

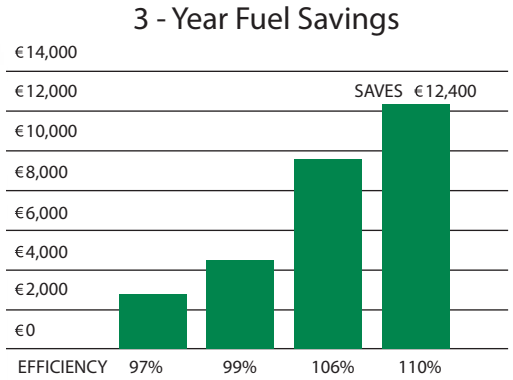

A penny saved is a penny earned

What if we woult tell you that Alubox X-treme is the most efficient boiler in it's class? It operates on wide range of flow rates with low pressure drop.

Smallest Footprint
2,7 m²

%110
Annual Average Efficiency

Incredible automation. Bult-in

Upto 16 boilers cascade sequencing with no extra equipment needed. In addition to one heating circle and DHW, each boiler controls upto 3 additional heat circles (zone control).
Automatic frost protection, built-in time program per each day of the week, weekdays, weeks or weekends. Just set and forget.

7bar
Max. Pressure

GAR
2016/426

NOx
CLASS 6

Safe and reliable

Each boiler is equipped with state of the art technology available today.
Every second 9 sensors are monitoring boiler's operation feeding data to 31 safety subsystems.

Aluminium
Heat Exchanger

1:6
Modulation Ratio

ΔT = 40°C

Total controll across the Globe

Keeps you in complete control across the country or across the world thanks to the web-server connectivity feature.

16
Boiler Cascade Sequencing

Gassero technology for your comfort	ALUBOX X-TREME 1315		ALUBOX X-TREME 1460		ALUBOX X-TREME 1550		ALUBOX X-TREME 1760	
	min.	maks.	min.	maks.	min.	maks.	min.	maks.
Heat Output Pn (80/60°C)	212	1220	243	1360	243	1445	124	1649
Heat Output Pn (50/30°C)	235	1315	268	1460	268	1555	142.3	1770,2
Turndown Ratio	1:6		1:5		1:5		1:12	
Heating Efficiency (80/60°C)	96.5	97.3	97.07	97.36	97.07	97.26	96.79	97,71
Heating Efficiency (50/30°C)	107.18	104.72	107.4	104.56	107.4	104.43	107.52	104,58
Partial Load, Return 30°C	108		108.14		108		108,66	
NOx Class	6		6		6		6	

Alubox X-treme 1315-1760 kW

Alubox X-Treme 1760

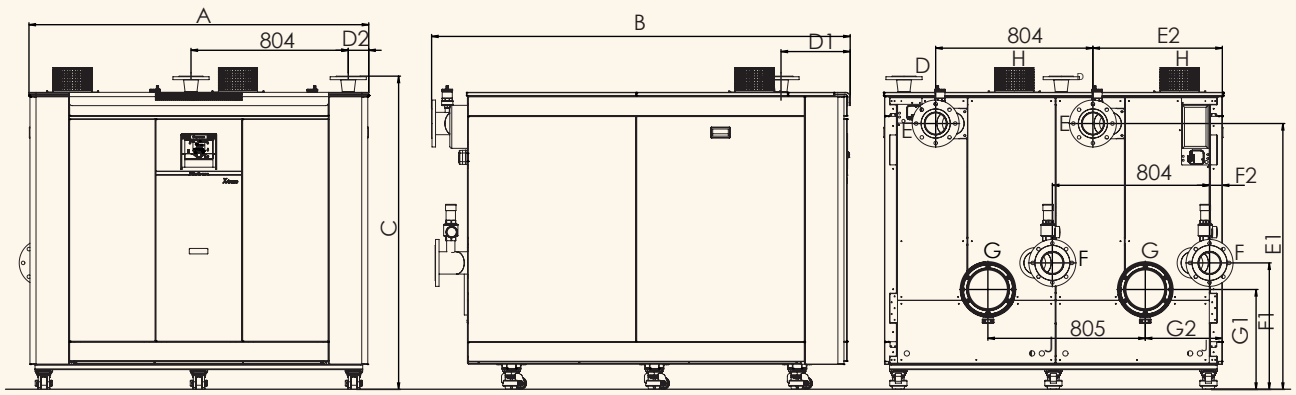

	ALUBOX X-TREME 1315	ALUBOX X-TREME 1460	ALUBOX X-TREME 1550	ALUBOX X-TREME 1760
A (Width)	985mm	985mm	985mm	1738mm
B (Length)	2730mm	2730mm	2730mm	2140mm
C (Height)	1600mm	1600mm	1600mm	1600mm
D (Gas inlet)	DN65(PN16)	DN65(PN16)	DN65(PN16)	DN65(PN16)
D1	578mm	388mm	388mm	543mm
D2	106mm	106mm	106mm	106mm
E (Water outlet conn.)	DN125(PN6)	DN125(PN6)	DN125(PN6)	DN125(PN6)
E1	1360mm	1360mm	1360mm	1360mm
E2	65mm	65mm	65mm	660mm
F (Water inlet conn.)	DN125(PN6)	DN125(PN6)	DN125(PN6)	DN125(PN6)
F1	647mm	647mm	647mm	647mm
F2	312mm	312mm	312mm	65mm
G (Flue diamter)	Ø250mm	Ø250mm	Ø250mm	Ø250mm
G1	511mm	511mm	511mm	511mm
G2	334mm	334mm	334mm	394mm
H (Air intake)	Ø200	Ø200	Ø200	Ø200
J (Condensate drain)	Ø25mm	Ø25mm	Ø25mm	Ø25mm

Alubox X-Treme 1315 - 1460 - 1550

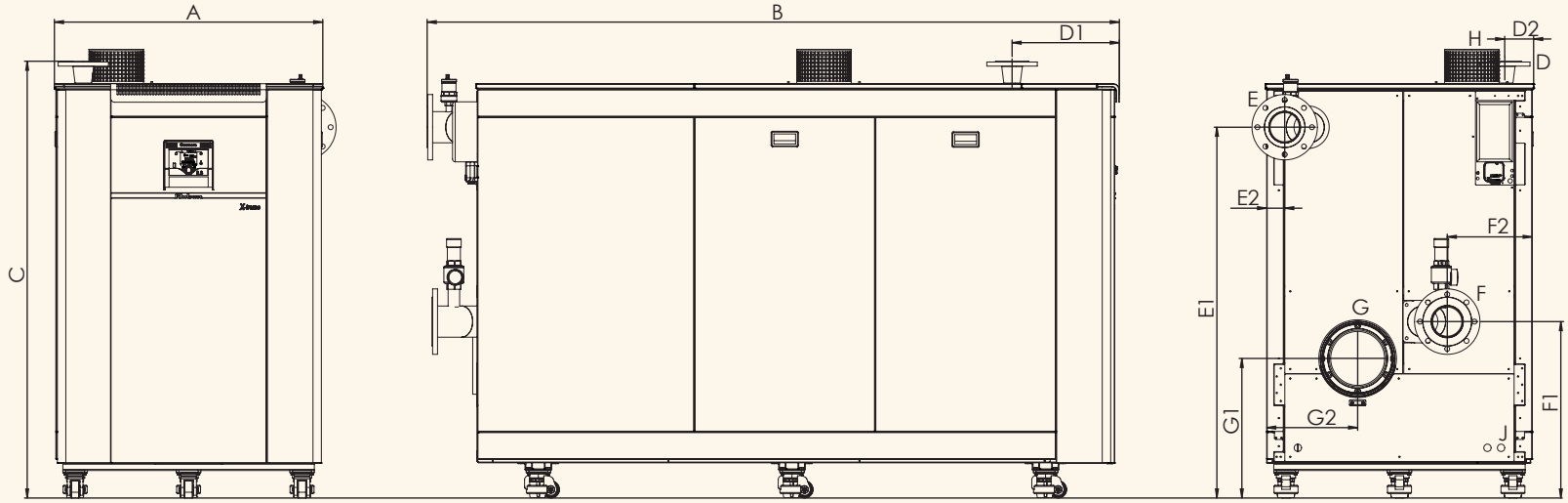

export@gassero.com

Alubox X-treme 2630-3100 kW

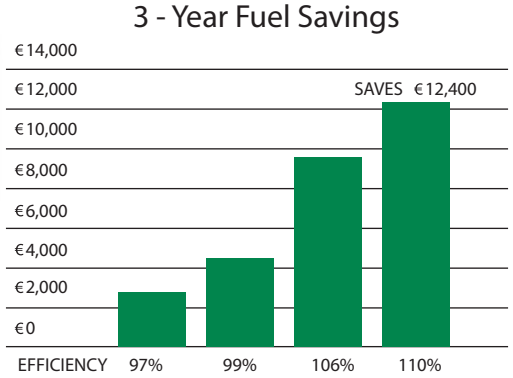

A penny saved is a penny earned

What if we woult tell you that Alubox X-treme is the most efficient boiler in it's class? It operates on wide range of flow rates with low pressure drop.

%110 Annual Average Efficiency

Incredible automation. Bult-in

Upto 16 boilers cascade sequencing with no extra equipment needed. In addition to one heating circle and DHW, each boiler controls upto 3 additional heat circles (zone control).
Automatic frost protection, built-in time program per each day of the week, weekdays, weeks or weekends. Just set and forget.

7bar Max. Pressure

GAR 2016/426

NOx CLASS 6

Safe and reliable

Each boiler is equipped with state of the art technology available today.
Every second 9 sensors are monitoring boiler's operation feeding data to 31 safety subsystems.

Aluminium Heat Exchanger

1:12 Modulation Ratio

ΔT = 40°C

Total controll across the Globe

Keeps you in complete control across the country or across the world thanks to the web-server connectivity feature.

16 Boiler Cascade Sequencing

Gassero technology for your comfort	ALUBOX X-TREME 2630		ALUBOX X-TREME 2920		ALUBOX X-TREME 3100	
	min.	maks.	min.	maks.	min.	maks.
Heat Output Pn (80/60°C)	212	2440	243	2720	243	2908
Heat Output Pn (50/30°C)	235	2630	268	2920	268	3110
Turndown Ratio	1:11		1:11		1:12	
Heating Efficiency (80/60°C)	96.5	97.3	97.07	97.36	97.07	97.26
Heating Efficiency (50/30°C)	107.18	104.72	107.4	104.56	107.4	104.43
Partial Load, Return 30°C	108		108.14		108.04	
NOx Class	6		6		6	

Alubox X-Treme 2630/2920/3100

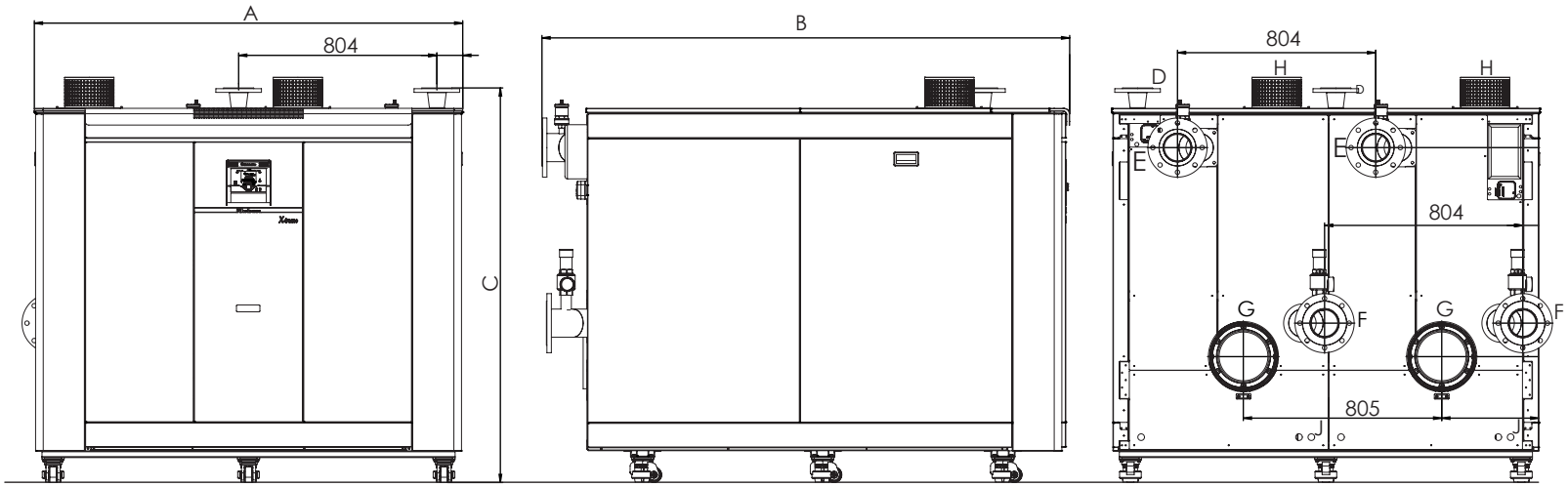

	ALUBOX X-TREME 2630	ALUBOX X-TREME 2920	ALUBOX X-TREME 3100
A (Width)	2035mm	2035mm	985mm
B (Length)	2730mm	2730mm	2730mm
C (Height)	1600mm	1600mm	1600mm
D (Gas inlet)	DN65(PN16)	DN65(PN16)	DN65(PN16)
E (Water outlet conn.)	DN125(PN6)	DN125(PN6)	DN125(PN6)
F (Water inlet conn.)	DN125(PN6)	DN125(PN6)	DN125(PN6)
G (Flue diamter)	Ø250mm	Ø250mm	Ø250mm
H (Air intake)	Ø200	Ø200	Ø200
J (Condensate drain)	Ø25mm	Ø25mm	Ø25mm

export@gassero.com

Aquabox 300
Premix Condensing Water Heater

Incredible automation. Bult-in
Upto 16 boilers cascade sequencing with no extra equipment needed. In addition to one heating circle and DHW, each boiler controls upto 3 additional heat circles (zone control).
Automatic frost protection, built-in time program per each day of the week, weekdays, weeks or weekends. Just set and forget.

Aluminium heat exchanger
High quality aluminium heat exchanger with 6mm thickness.
Stainless steel both body and serpantine.

Safe and reliable
Each water heater is equipped with state of the art technology available today.
Every second 9 sensors are monitoring boiler's operation feeding data to 31 safety subsystems.

%110 Annual Average Efficiency

1:5 Modulation Ratio

16 Boiler Cascade Sequencing

6bar Max. Pressure

NOx CLASS 6

Stainless Tank

Aluminium Heat Exchanger

Total controll across the Globe
Keeps you in complete control across the country or across the world thanks to the web-server connectivity feature.

Heating

Gassero technology for your comfort	AQUABOX 300 2.0	
	min.	maks.
Nominal Heat Output Pn at (50/30°C)	26.6	91
Heating Efficiency (50/30°C)	108.1	
Partial Load, Return 30°C (direct Method)	109.8	
Heating Efficiency (80/60°C)	98.4	
Turndown Ratio	1:4	
NOx Class	5	

DHW

Gassero technology for your comfort	AQUABOX 300 2.0
Tank Volume (lt)	300
Flow 10/45°C (lt/h)	2200
Flow 10/55°C (lt/h)	1714
Flow 10/60°C (lt/h)	1407
Max. Pressure (Bar)	10
Operating Temperature (°C)	40-60

Aquabox 300

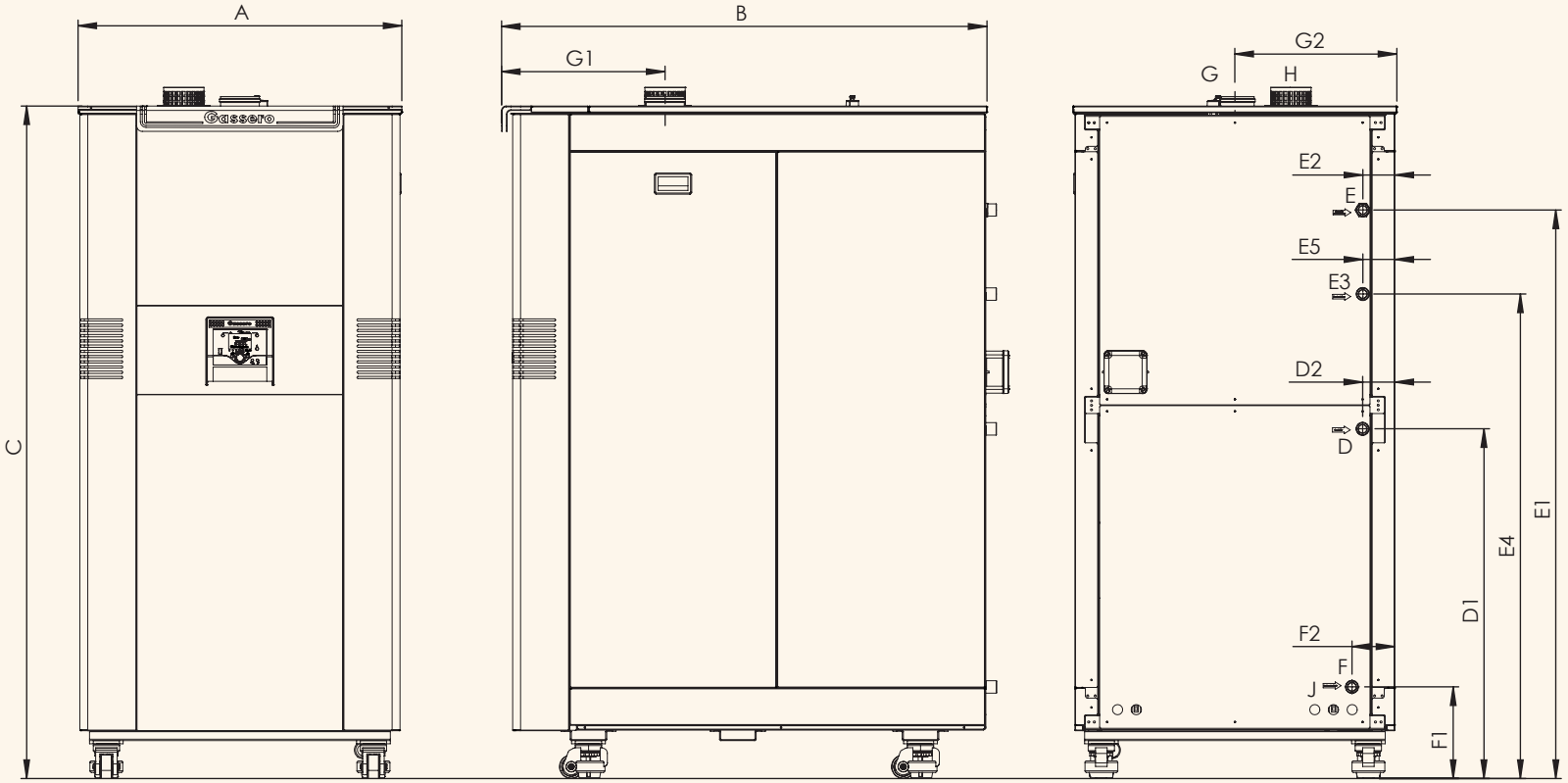

	Aquabox 300
A (Width)	865mm
B (Length)	1300mm
C (Height)	1800mm
D (Gas inlet)	1"
D1	868mm
D2	85mm
E (Water outlet conn.)	1"
E1	1522mm
E2	85mm
E3 (Re-circulation)	1"
E4	1297mm
E5	85mm
F (Water inlet conn.)	1"
F1	245mm
F2	115mm
G (Flue diamter)	Ø100mm
G1	437mm
G2	433mm
H (Air intake)	Ø110
J (Condensate drain)	Ø25mm

Alucon 50-150 kW

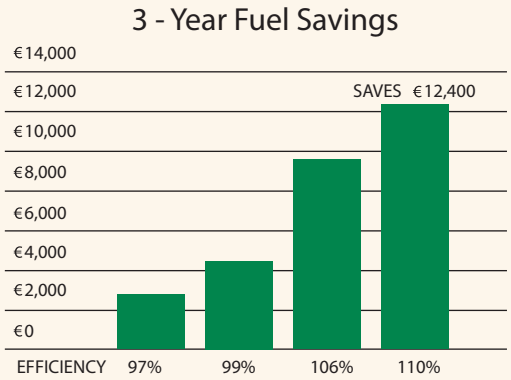

A penny saved is a penny earned

What if we woult tell you that Alucon is the most efficient boiler in it's class? It operates on wide range of flow rates with low pressure drop.

%110 Annual Average Efficiency

Incredible automation. Bult-in

Upto 16 boilers cascade sequencing with no extra equipment needed. In addition to one heating circle and DHW, each boiler controls upto 3 additional heat circles (zone control).
Automatic frost protection, built-in time program per each day of the week, weekdays, weeks or weekends. Just set and forget.

6bar Max. Pressure

Safe and reliable

Each boiler is equipped with state of the art technology available today.
Every second 9 sensors are monitoring boiler's operation feeding data to 31 safety subsystems.

16 Boiler Cascade Sequencing

GAR 2016/426

NOx CLASS 6

1:5 Modulation Ratio

Aluminium Heat Exchanger

Total controll across the Globe

Keeps you in complete control across the country or across the world thanks to the web-server connectivity feature.

Gassero technology for your comfort	ALUCON 50		ALUCON 70		ALUCON 90		ALUCON 115		ALUCON 125		ALUCON 150	
	min.	maks.	min.	maks.	min.	maks.	min.	maks.	min.	maks.	min.	maks.
Nominal Heat Output Pn at (80/60°C)	7.3	47.8	9.9	63.4	14.3	86.3	14.3	109.5	19.2	120.8	19.2	139.82
Nominal Heat Output Pn at (50/30°C)	8.4	51.4	11.6	68.5	15.1	91	15.1	118.1	22.3	128	22.3	149.10
Turndown Ratio	1:6		1:6		1:6		1:8		1:6		1:7	
Heating Efficiency (80/60°C)	96.87	97.66	96.69	97.22	96.79	98.42	96.79	98.16	97.03	98.28	97.03	98.19
Heating Efficiency (50/30°C)	108.08	105.89	107.98	103.88	108.19	104.97	108.19	104.79	108.14	104.4	108.14	103.22
Partial Load, Return 30°C (direct Method)	108.56		108.39		108.52		108.65		108.46		108.37	
NOx Class	6		6		6		6		6		6	

Alucon **50-150 kW**

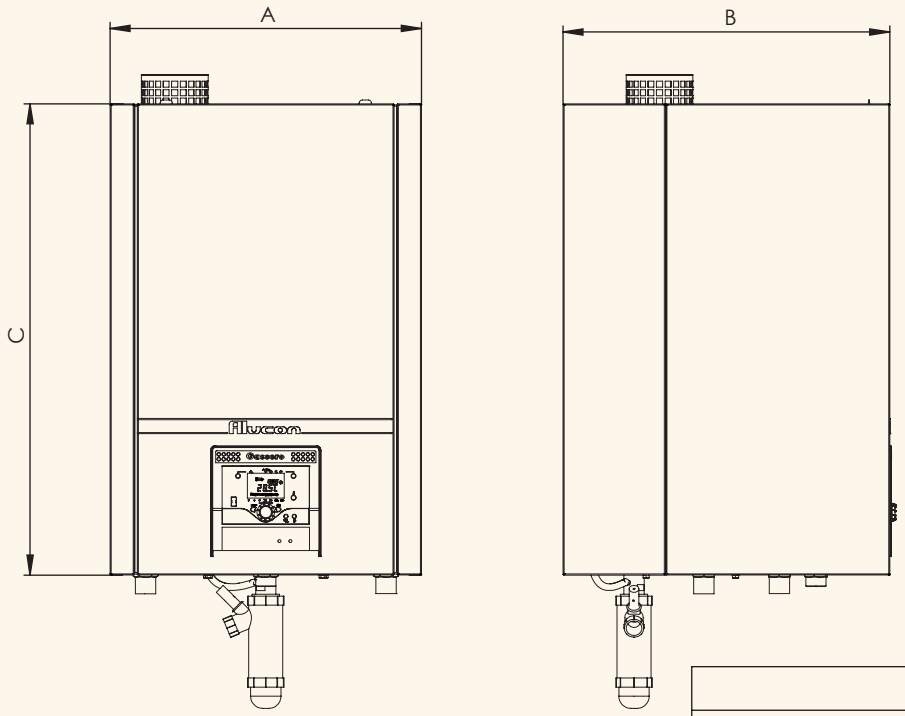

Alucon 50/70/90/115/125/150

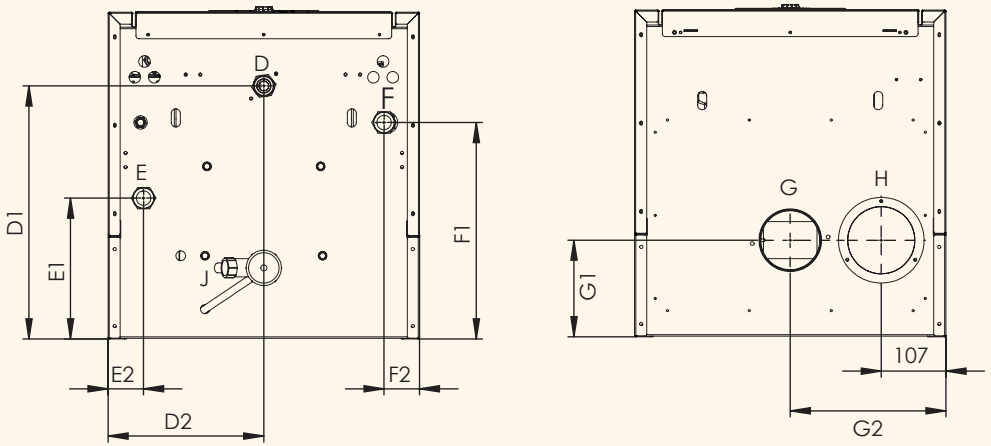

	ALUCON 50	ALUCON 70	ALUCON 90	ALUCON 115	ALUCON 125	ALUCON 150
A (Width)	510mm	510mm	510mm	510mm	600mm	600mm
B (Length)	540mm	540mm	540mm	540mm	540mm	540mm
C (Height)	770mm	770mm	770mm	770mm	770mm	770mm
D (Gas inlet)	3/4"	3/4"	1"	1"	1"	1"
D1	417mm	417mm	417mm	417mm	417mm	417mm
D2	256mm	256mm	256mm	256mm	256mm	256mm
E (Water outlet conn.)	1"	1"	1"	1"	1"	1"
E1	232mm	232mm	232mm	232mm	232mm	232mm
E2	105mm	105mm	58mm	58mm	58mm	58mm
F (Water inlet conn.)	1"	1"	1"	1"	1"	1"
F1	357mm	357mm	357mm	357mm	357mm	357mm
F2	105mm	105mm	58mm	58mm	58mm	58mm
G (Flue diamter)	Ø100mm	Ø100mm	Ø100mm	Ø100mm	Ø100mm	Ø100mm
G1	159mm	159mm	159mm	159mm	159mm	159mm
G2	257mm	257mm	257mm	257mm	303mm	303mm
H (Air intake)	Ø80	Ø80	Ø110	Ø110	Ø110	Ø110
J (Condensate drain)	Ø25mm	Ø25mm	Ø25mm	Ø25mm	Ø25mm	Ø25mm

export@gassero.com

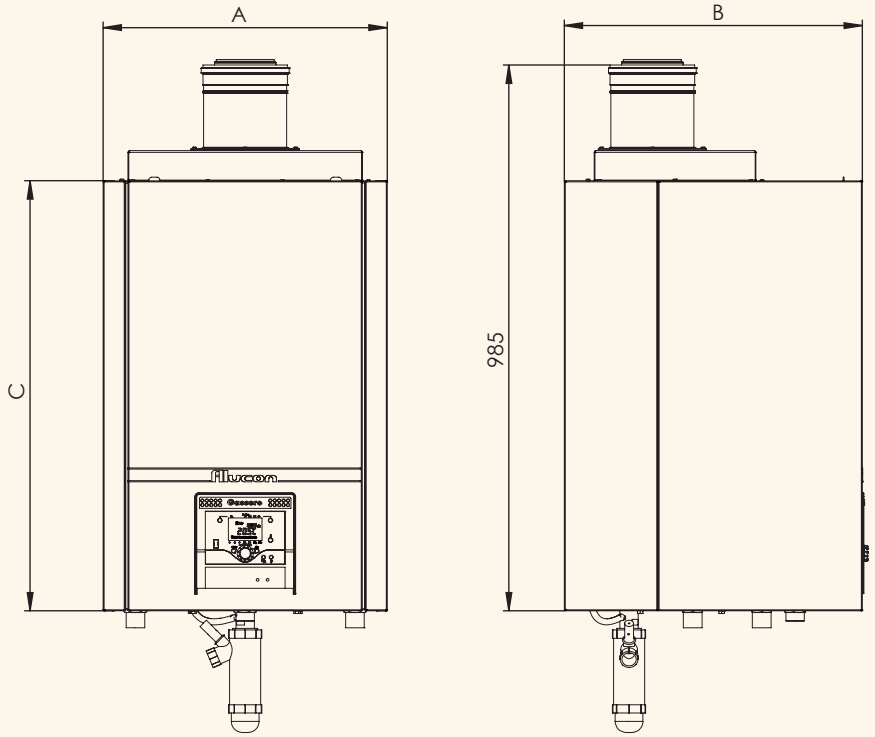

Alucon 50/70/90/115/125/150
Hermetic

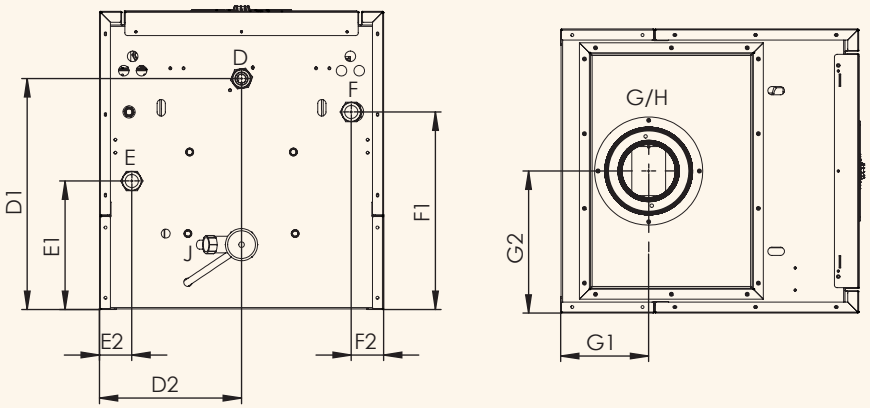

Alucon **50-150 kW**

	ALUCON 50	ALUCON 70	ALUCON 90	ALUCON 115	ALUCON 125	ALUCON 150
A (Width)	510mm	510mm	510mm	510mm	600mm	600mm
B (Length)	540mm	540mm	540mm	540mm	540mm	540mm
C (Height)	770mm	770mm	770mm	770mm	770mm	770mm
D (Gas inlet)	3/4"	3/4"	1"	1"	1"	1"
D1	417mm	417mm	417mm	417mm	417mm	417mm
D2	256mm	256mm	256mm	256mm	256mm	256mm
E (Water outlet conn.)	1"	1"	1"	1"	1"	1"
E1	232mm	232mm	232mm	232mm	232mm	232mm
E2	105mm	105mm	58mm	58mm	58mm	58mm
F (Water inlet conn.)	1"	1"	1"	1"	1"	1"
F1	357mm	357mm	357mm	357mm	357mm	357mm
F2	105mm	105mm	58mm	58mm	58mm	58mm
G/H (Flue diameter/Air intake)	Ø100/150mm	Ø100/150mm	Ø100/150mm	Ø100/150mm	Ø100/150mm	Ø100/150mm
G1	159mm	159mm	159mm	159mm	159mm	159mm
G2	257mm	257mm	257mm	257mm	303mm	303mm
J (Condensate drain)	Ø25mm	Ø25mm	Ø25mm	Ø25mm	Ø25mm	Ø25mm

export@gassero.com

Wallcon X-treme 42-150 kW

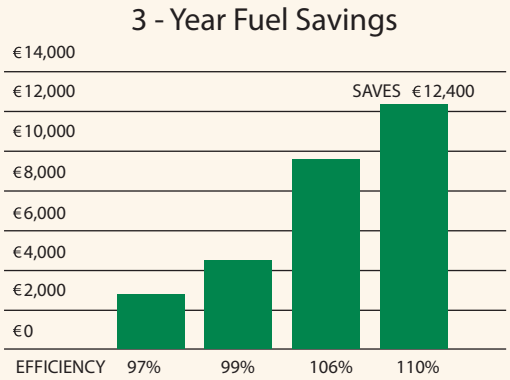

A penny saved is a penny earned

What if we woult tell you that Wallcon X-Treme is the most efficient boiler in it's class? It operates on wide range of flow rates with low pressure drop.

1:6 Modulation Ratio

%110 Annual Average Efficiency

Incredible automation. Bult-in

Upto 16 boilers cascade sequencing with no extra equipment needed. In addition to one heating circle and DHW, each boiler controls upto 3 additional heat circles (zone control).
Automatic frost protection, built-in time program per each day of the week, weekdays, weeks or weekends. Just set and forget.

16 Boiler Cascade Sequencing

Safe and reliable

Each boiler is equipped with state of the art technology available today.
Every second 9 sensors are monitoring boiler's operation feeding data to 31 safety subsystems.

Stainless Heat Exchanger

GAR 2016/426

NOx CLASS 6

Total controll across the Globe

Keeps you in complete control across the country or across the world thanks to the web-server connectivity feature.

3bar Max. Pressure — 42 - 50 kW Models

4,5bar Max. Pressure — 67 kW Models

6bar Max. Pressure — 115 - 125 - 150 kW Models

Gassero technology for your comfort	WALLCON X-TREME 42		WALLCON X-TREME 50		WALLCON X-TREME 67		WALLCON X-TREME 115		WALLCON X-TREME 125		WALLCON X-TREME 150	
	min.	maks.	min.	maks.	min.	maks.	min.	maks.	min.	maks.	min.	maks.
Nominal Heat Output Pn at (80/60°C)	7	38.3	10	46.3	11	61	26.1	105.4	16.6	116.2	19.5	138
Nominal Heat Output Pn at (50/30°C)	7.6	41.3	8.9	50.1	22	67	29.3	115.5	18.4	126	22.7	150
Turndown Ratio	1:5		1:6		1:6		1:4		1:7		1:7	
Heating Efficiency (80/60°C)	97	97.82	96.8	97.5	97.9	98.8	97.31	97.26	95.27	97	96.49	97
Heating Efficiency (50/30°C)	105.6	104.94	105.7	104.3	107	106	107.19	106.53	106.11	106.19	106.49	105.30
Partial Load, Return 30°C (direct Method)	108.21		108.29		108.09		108		108		108.34	
NOx Class	6		6		6		6		6		6	

Wallcon X-treme 42-150 kW

Wallcon X-Treme 42/50/67

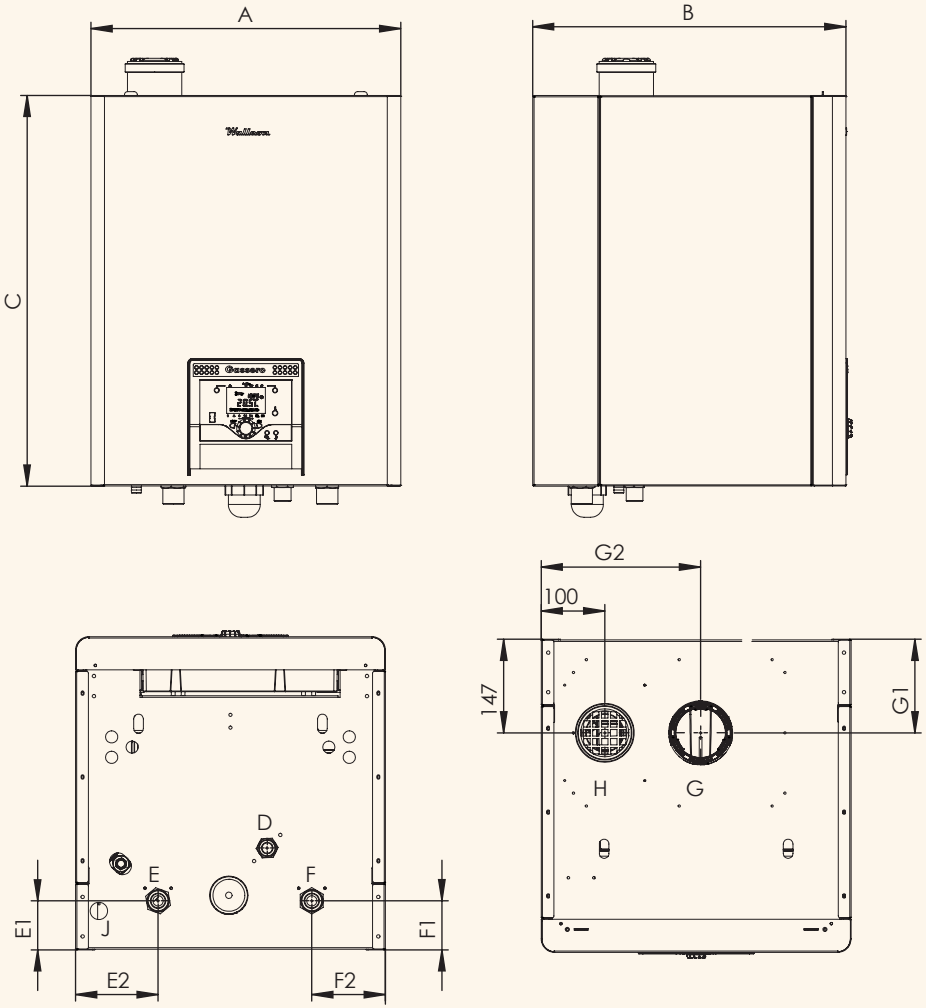

Wallcon X-Treme 115/125/150

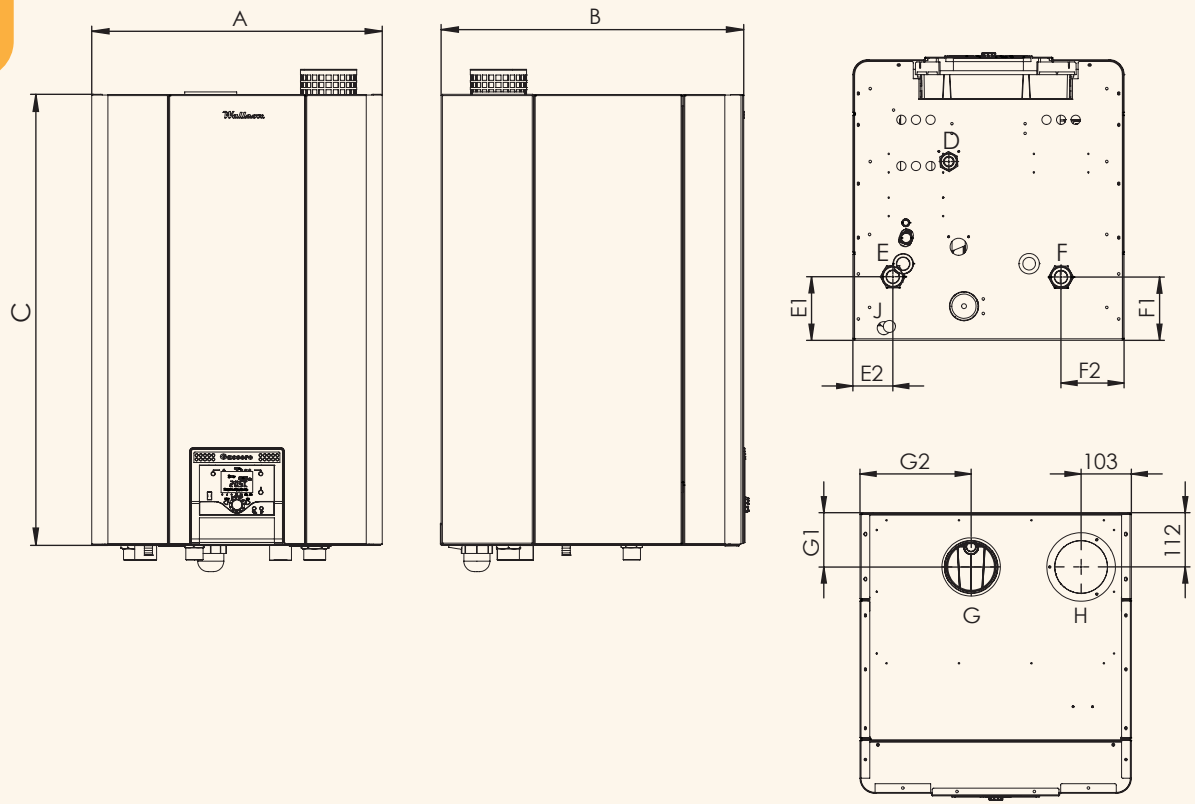

	WALLCON X-TREME 42	WALLCON X-TREME 50	WALLCON X-TREME 67	WALLCON X-TREME 115	WALLCON X-TREME 125	WALLCON X-TREME 150
A (Width)	485mm	485mm	485mm	557mm	557mm	557mm
B (Length)	490mm	490mm	490mm	580mm	580mm	580mm
C (Height)	610mm	610mm	610mm	865mm	865mm	865mm
D (Gas inlet)	3/4"	3/4"	3/4"	1"	1"	1"
E (Water outlet conn.)	1"	1"	1"	1 1/4"	1 1/4"	1 1/4"
E1	77mm	77mm	77mm	130mm	130mm	157mm
E2	129mm	129mm	129mm	82mm	82mm	103mm
F (Water inlet conn.)	1"	1"	1"	1 1/4"	1 1/4"	1 1/4"
F1	77mm	77mm	77mm	130mm	130mm	157mm
F2	115mm	115mm	115mm	130mm	130mm	195mm
G (Flue diameter)	Ø80mm	Ø80mm	Ø80mm	Ø100mm	Ø100mm	Ø100mm
G1	147mm	147mm	147mm	112mm	112mm	112mm
G2	250mm	250mm	250mm	330mm	330mm	330mm
H (Air intake)	Ø80	Ø80	Ø80	Ø110	Ø110	Ø110
J (Condensate drain)	Ø25mm	Ø25mm	Ø25mm	Ø25mm	Ø25mm	Ø25mm

export@gassero.com

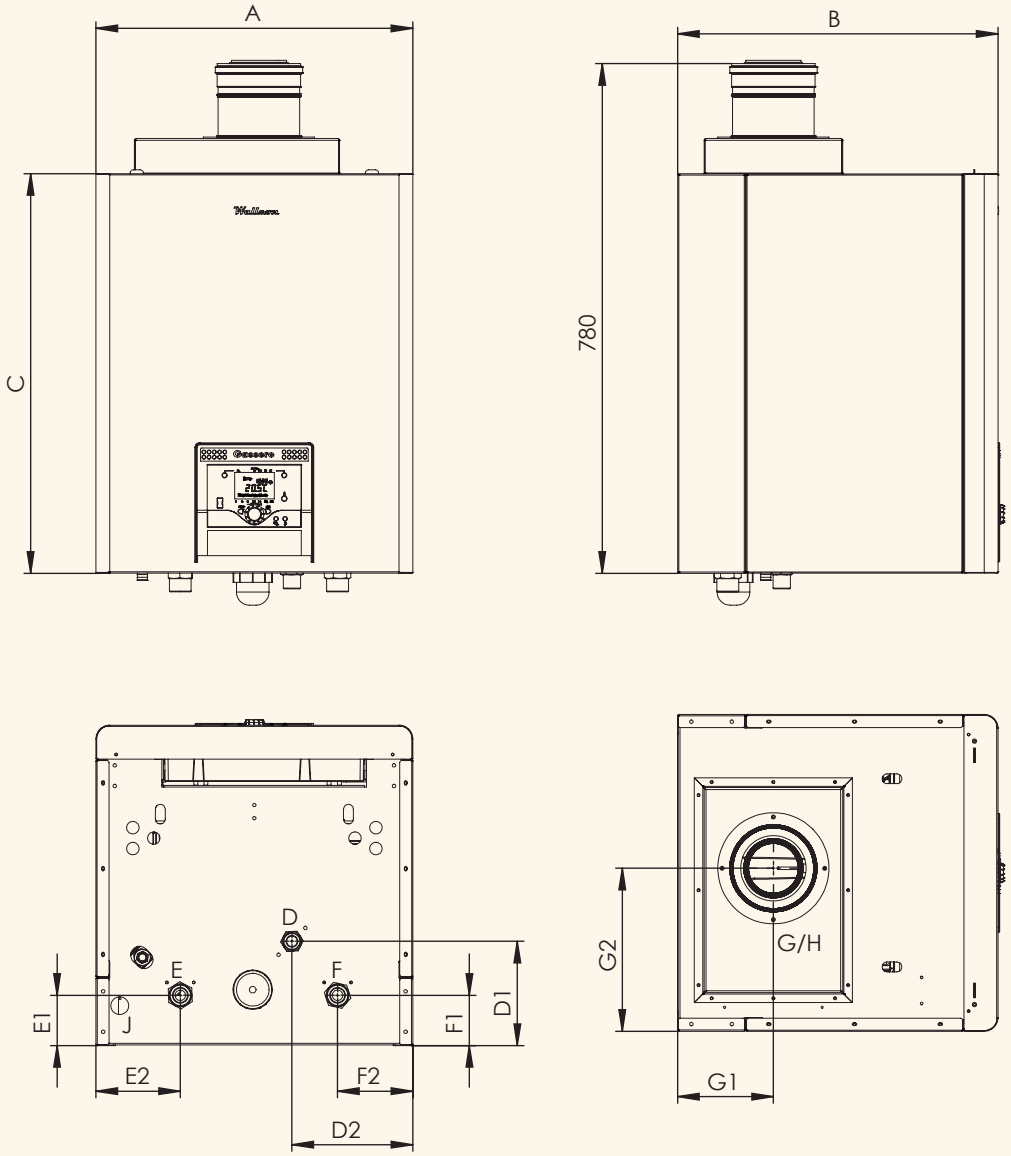

Wallcon X-Treme 42/50/67
Hermetic

	WALLCON X-TREME 42	WALLCON X-TREME 50	WALLCON X-TREME 67
A (Width)	485mm	485mm	485mm
B (Length)	490mm	490mm	490mm
C (Height)	610mm	610mm	610mm
D (Gas inlet)	3/4"	3/4"	3/4"
D1	160mm	160mm	160mm
D2	185mm	185mm	185mm
E (Water outlet conn.)	1"	1"	1"
E1	77mm	77mm	77mm
E2	129mm	129mm	129mm
F (Water inlet conn.)	1"	1"	1"
F1	77mm	77mm	77mm
F2	115mm	115mm	115mm
G/H (Flue diameter/Air intake)	Ø80/125mm	Ø80/125mm	Ø80/125mm
G1	147mm	147mm	147mm
G2	250mm	250mm	250mm
J (Condensate drain)	Ø25mm	Ø25mm	Ø25mm

Wallcon X-treme **42-150 kW**

Wallcon X-Treme 115/125/150 Hermetic

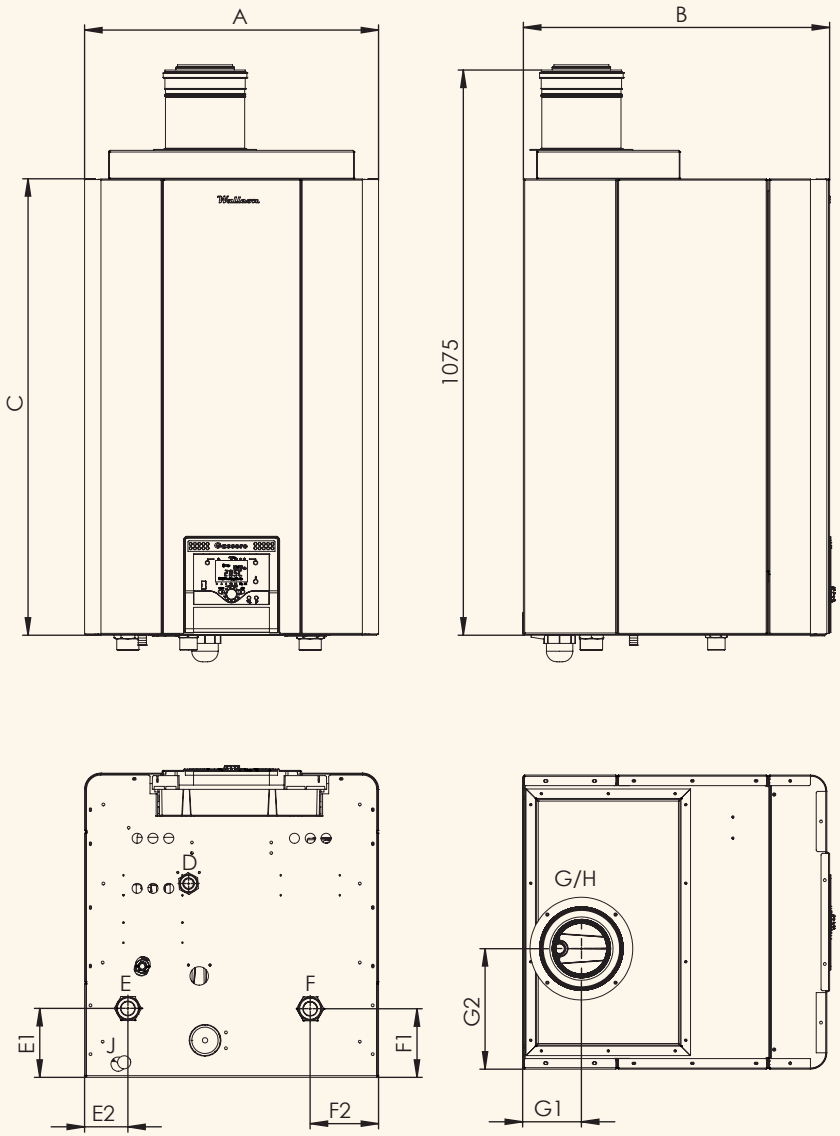

	WALLCON X-TREME 115	WALLCON X-TREME 125	WALLCON X-TREME 150
A (Width)	557mm	557mm	557mm
B (Length)	580mm	580mm	580mm
C (Height)	865mm	865mm	865mm
D (Gas inlet)	1"	1"	1"
E (Water outlet conn.)	1 1/4"	1 1/4"	1 1/4"
E1	130mm	130mm	157mm
E2	82mm	82mm	103mm
F (Water inlet conn.)	1 1/4"	1 1/4"	1 1/4"
F1	130mm	130mm	157mm
F2	130mm	130mm	195mm
G/H (Flue diameter/Air intake)	Ø100/150mm	Ø100/150mm	Ø100/150mm
G1	112mm	112mm	112mm
G2	330mm	330mm	330mm
J (Condensate drain)	Ø25mm	Ø25mm	Ø25mm

export@gassero.com

WALL HUNG CONDENSING BOILER CASCADE DIAGRAM

PLATE HEAT EXCHANGER

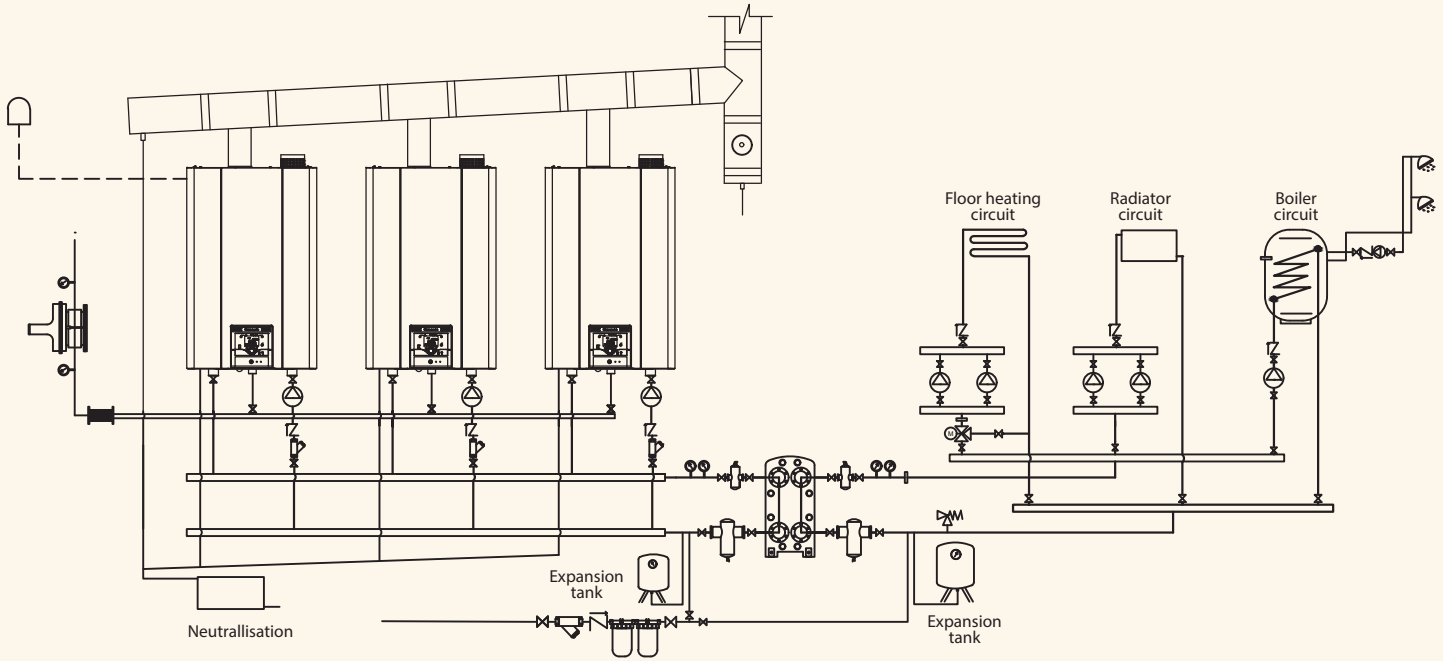

HYDRAULIC SEPARATOR

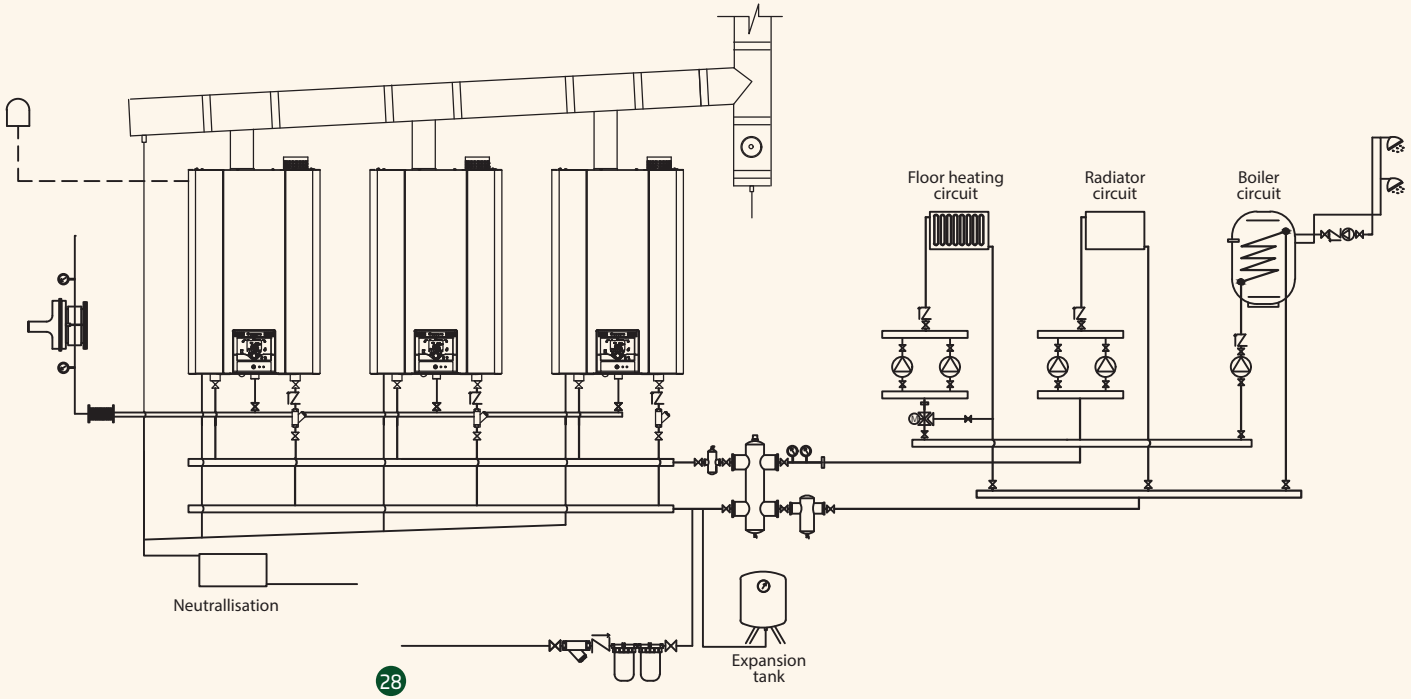

Gassero
technology for your comfort

HYDRAULIC SEPARATOR

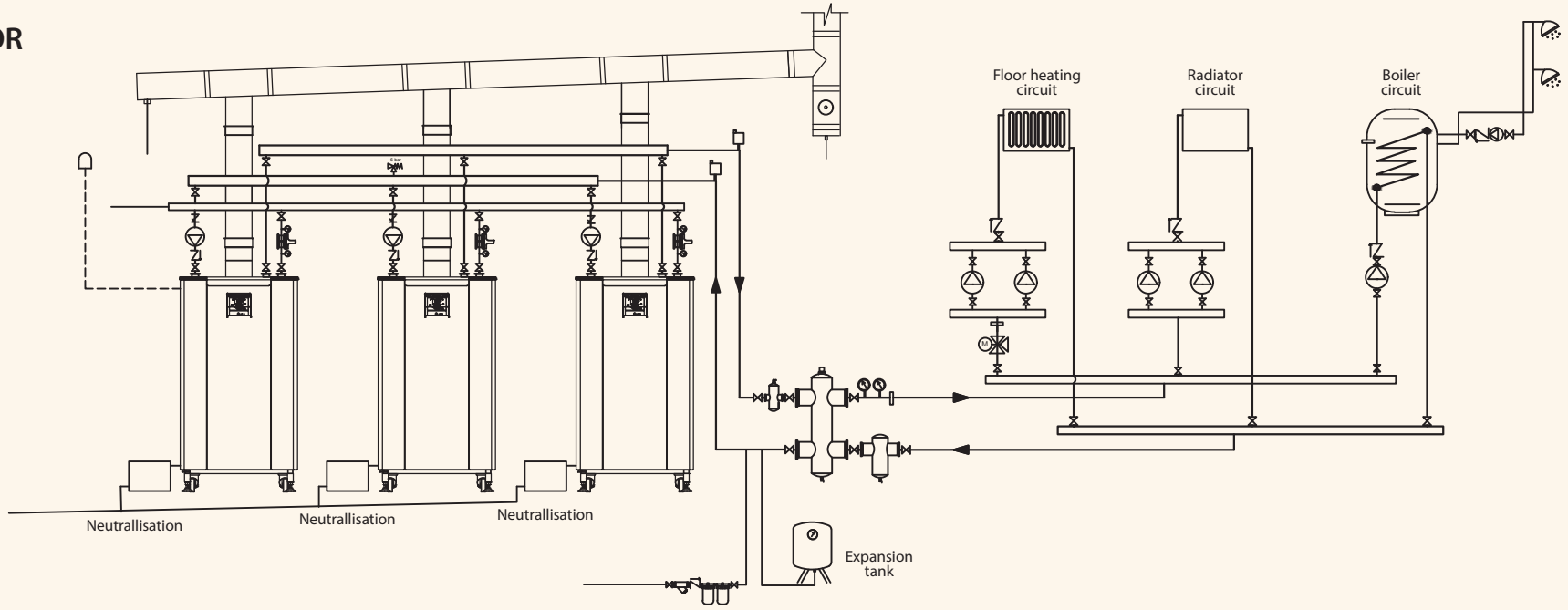

PLATE HEAT EXCHANGER

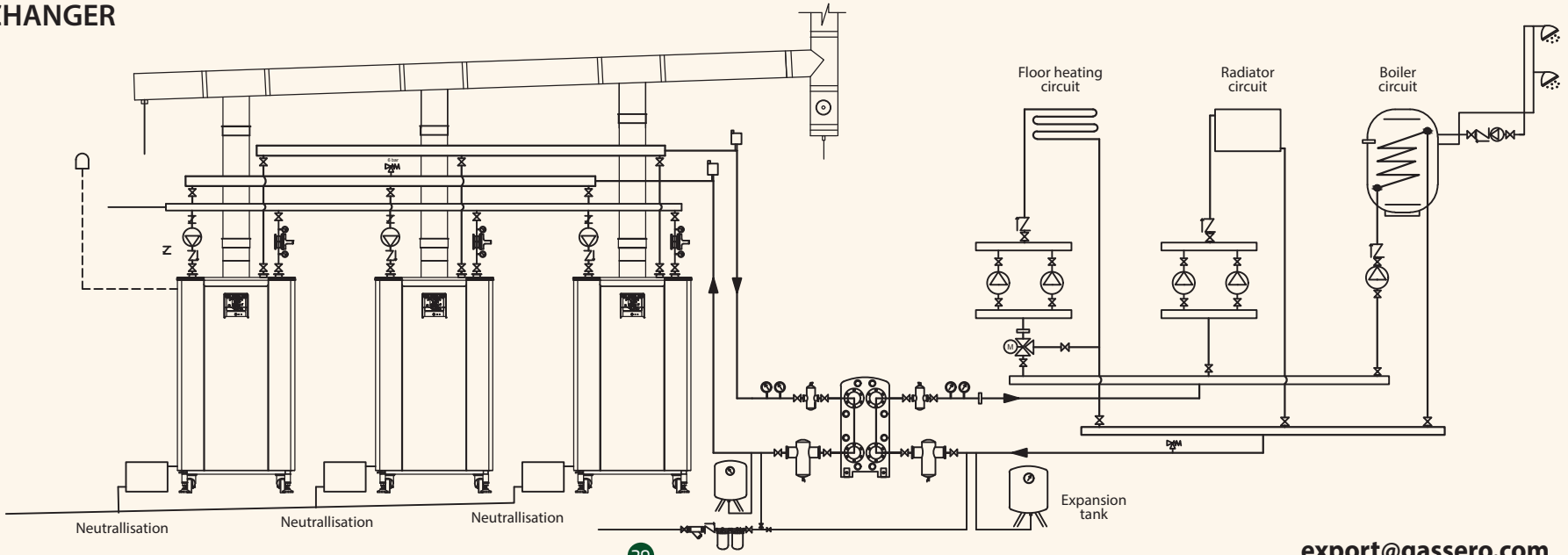

export@gassero.com

ELECTRICAL DIAGRAM

ALUCON ELECTRICAL DIAGRAM

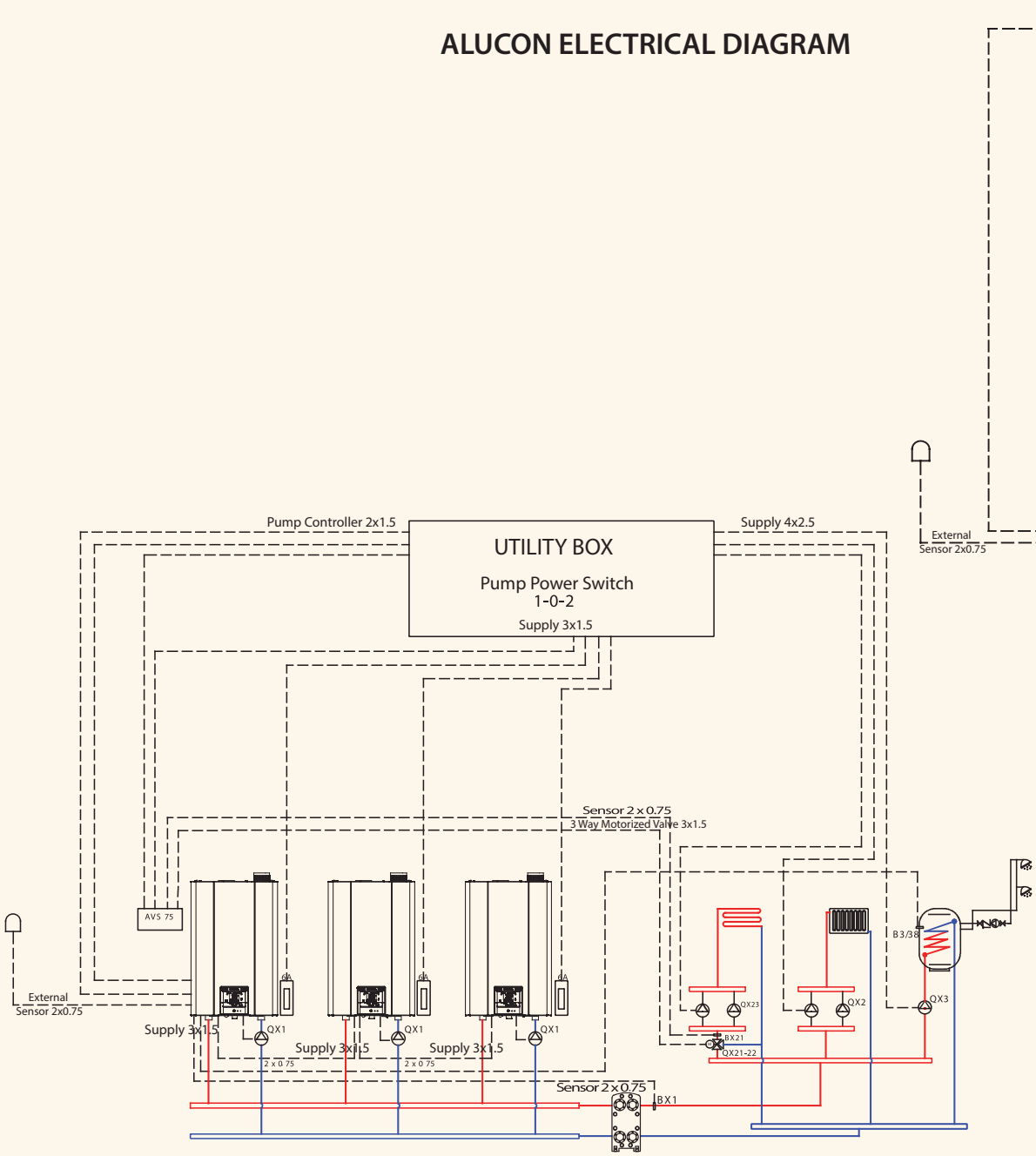

Gassero
technology for your comfort

WALLCON X-TREME ELECTRICAL DIAGRAM

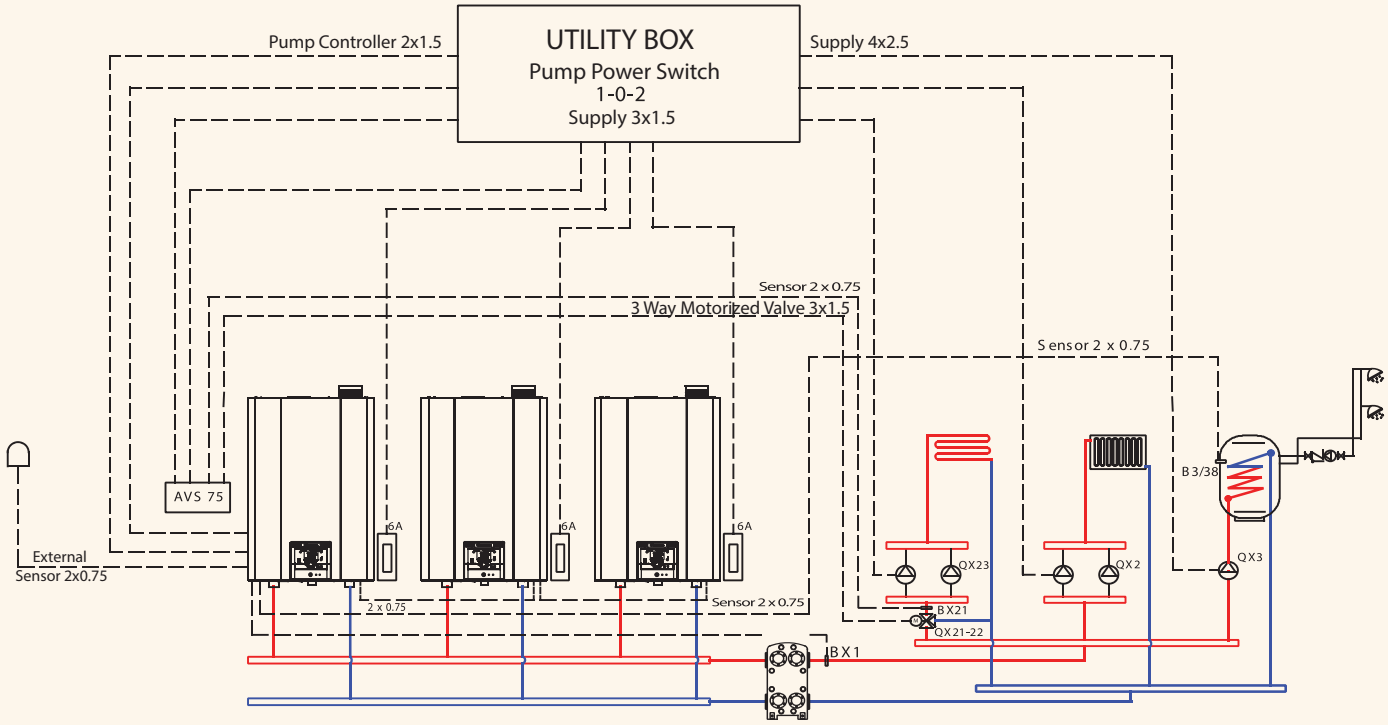

FLOOR STAND CONDENSING BOILER ELECTRICAL DIAGRAM

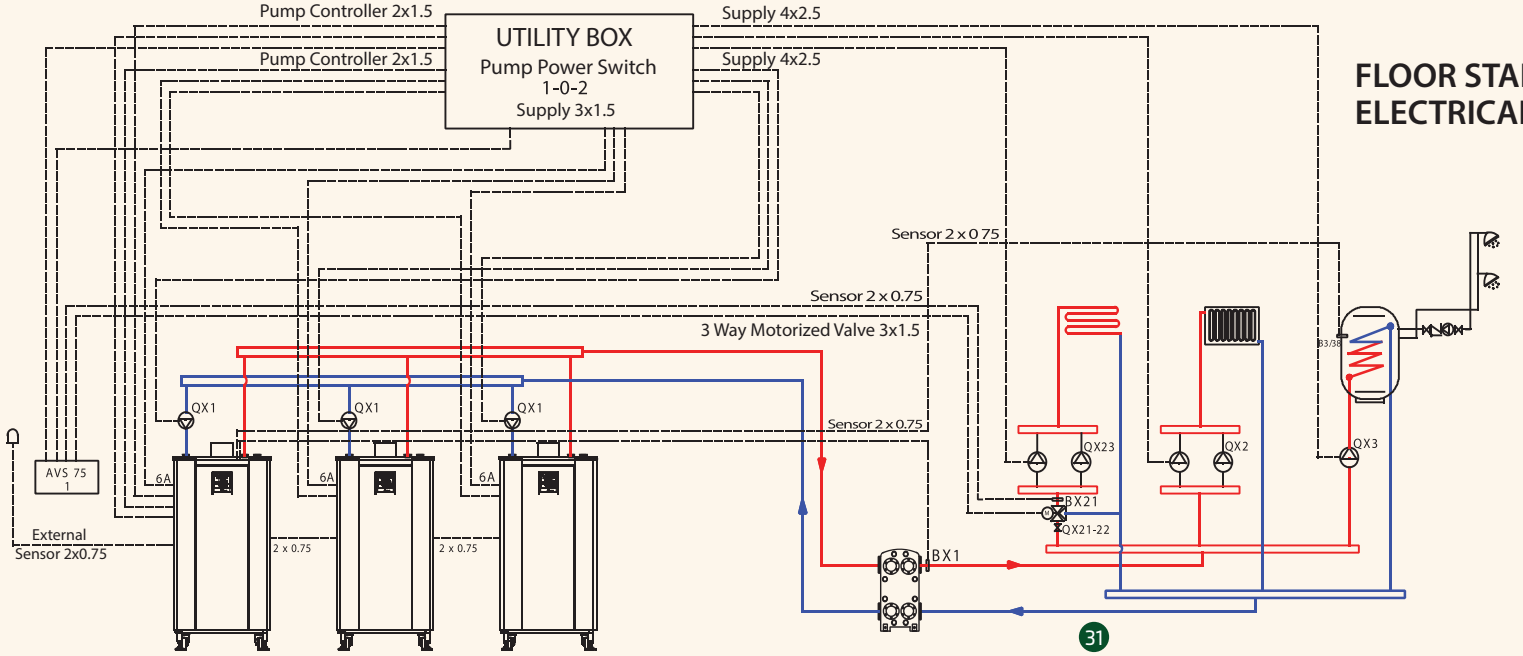

export@gassero.com

ULTRABOX TECHNICAL DATA

Type Of Product		ULTRABOX 210		ULTRABOX 255		ULTRABOX 420		ULTRABOX 465		ULTRABOX 510		ULTRABOX 1125	
General		min	max	min	max	min	max	min	max	min	max	min	max
Type Of Flue Installation		B23-C43 C53-C83		B23-C43 C53-C83		B23-C43 C53-C83		B23-C43 C53-C83		B23-C43 C53-C83		B23-C43 C53-C83	
Nominal Heat Input Qn	kw	30.31	198.32	35.01	237.70	60.62	396.64	65.32	436.02	70.20	475.40	115.82	1069.86
Nominal Heat Output Pn at (80-60) °C	kw	29.54	194.15	34.14	232.47	59.08	388.30	63.68	426.62	68.28	464.94	112.88	1037.36
Nominal Heat Output Pn at (50-30) °C	kw	32.61	212.13	37.74	256.52	65.22	424.26	70.35	468.65	75.48	513.04	123.23	1116.42
Water Operating Pressure	bar	0.8	6	0.8	6	0.8	6	0.8	6	0.8	6	0.8	6
Maxımum Operiation Temperature	°C	90		90		90		90		90		90	
Cut-off Temp. for Limit Termostad	°C	95		95		95		95		95		95	
Modulation Ratio		1:7		1:7		1:7		1:7		1:7		1:9	
Heating Efficiency (80-60) °C	%	97.47	97.9	97.5	97.8	97.47	97.9	97.485	97.85	97.5	97.8	97.47	96.96
Heating Efficiency (50-30) °C	%	107.22	107.00	107.26	107.03	107.22	107	107.24	107.015	107.26	107.03	107.19	106.15
Partial Load, Return 30°C (Direct Method)	%	108.38		108.41		108.38		108.395		108.41		107.4	
Flue Gas Temperature (80-60) °C	°C	60.3	62.1	60.3	64.8	60.3	62.1	60.3	63.45	60.3	64.8	61.32	63.01
Flue Gas Temperature (50-30) °C	°C	32.1	36.1	32.1	35.5	32.1	36.1	32.1	35.8	32.1	35.5	30.53	33.61
CO2 Emissions G20 (Hi: 34.02 MJ/m³) 20mbar	%	9.6	9.4	9.4	9.2	9.6	9.4	9.5	9.3	9.4	9.2	9.2	9.4
NOx Class	Class	6		6		6		6		6		6	
NOx Value	mg/kWh	35		37		35		37		39		48	
Flue Gas Mass G20 (Hi: 34.02 MJ/m³)	g/sec	13	88	15	107	13	176	13	195	15	214	87	471
Water Flow (80/60°C)	m³/h	1.33	8.66	1.54	10.59	2.66	17.32	2.87	19.25	3.08	21.18	4.771	48.585
Water Flow (50/30°C)	m³/h	1.43	9.07	1.66	11.2	2.86	18.14	3.09	20.27	3.32	22.4	5.069	49.695
Hydraulic Loss (80/60°C)	kPa	24		27		24		27		27		27	
Hydraulic Loss (50/30°C)	kPa	24		27		24		27		27		27	
Gas Consumption G20 (Hi: 34.02 MJ/m³) (80/60°C)	m³/h	3.14	20.52	3.62	24.6	6.28	41.04	6.76	45.12	7.24	49.2	12.033	111.155
Gas Consumption G20 (Hi: 34.02 MJ/m³) (50/30°C)	m³/h	3.14	20.48	3.64	24.77	6.28	40.96	6.78	45.25	7.28	49.54	11.965	109.607
Max Gas Suppy Pressure G 20	mBar	21		21		21		21		21		21	
Min Gas Suppy Pressure G 20	mBar	17		17		17		17		17		17	
Flue Pressure	Pa	160		160		160 x 2pcs		160 x 2pcs		160 x 2pcs		100	
Flue Connection Dimensition	Ø	Ø170		Ø170		Ø170x2		Ø170x2		Ø170x2		Ø250	
Boiler Weight	kg	260		260		451		451		451		897	

Type Of Product		ALUBOX 70		ALUBOX 115		ALUBOX 150		ALUBOX 208		ALUBOX 290		ALUBOX 540		ALUBOX 700		ALUBOX 1100		ALUBOX 2200	
General		min	max	min	max	min	max	min	max	min	max	min	max	min	max	min	max	min	max
Type Of Flue Installation		B23-B53-C53-C13 C33-C43-C63-C83		B23-B53-C53-C13 C33-C43-C63-C83		B23-B53-C53-C13 C33-C43-C63-C83		B23		B23		B23		B23		B23		B23	
Nominal Heat Input Qn	kw	10.2	65.6	14.9	112.3	19.9	143.1	35.3	200	48	280	81.9	517	101.4	661	150.5	1029.6	301	2059.2
Nominal Heat Output Pn at (80-60) °C	kw	9.9	63.4	14.3	109.5	19.2	139.8	34.5	195.2	46.7	274.1	79.1	502.9	97.8	643.1	146	1001.8	292	2003.6
Nominal Heat Output Pn at (50-30) °C	kw	11.6	68.5	15.1	118.1	22.3	149.1	36.7	207.9	51.4	286.2	84.7	539.2	107.8	708.4	160.7	1107.6	321.4	2215.2
Water Operating Pressure	bar	0.8	6	0.8	6	0.8	6	0.8	6	0.8	6	0.8	6	0.8	6	0.8	6	0.8	6
Maxımum Operiation Temperature	°C	85		85		85		90		90		90		90		90		90	
Cut-off Temp. for Limit Termostad	°C	95		95		95		105		105		95		95		95		95	
Modulation Ratio		1:6		1:8		1:7		1:6		1:6		1:6		1:7		1:7		1:7	
Heating Efficiency (80-60) °C	%	96.69	97.22	96.79	98.16	97.03	98.19	97.7	97.6	97.3	97.9	96.6	97.3	96.5	97.3	97	97.3	97	97.3
Heating Efficiency (50-30) °C	%	107.98	103.88	108.19	104.79	108.14	103.22	103.2	104	107.5	103.8	105	104	107	107.4	107.1	107	107.1	107
Partial Load, Return 30°C (Direct Method)	%	108.39		108.65		108.37		107.4		107.3		106.7		108.6		108		108	
Flue Gas Temperature (80-60) °C	°C	55.4	72.1	56.8	64.9	56.9	70.3	53.2	63.4	54.2	64.6	55.5	63.6	61.4	65.8	61.9	64.6	61.9	64.6
Flue Gas Temperature (50-30) °C	°C	30.1	52.3	30.2	53.5	30.5	47.1	29	52.7	29	47.4	30.3	40.1	34.2	34.5	29.4	33.8	29.4	33.8
CO2 Emissions G20 (Hi: 34.02 MJ/m^3) 20mbar	%	9.05	9.61	9.44	9.36	9.54	9.56	8.8	9.3	8.8	9.8	8.9	9.1	8.9	9.4	9	9.3	9	9.3
NOx Class	Class	6		6		6		6		6		6		6		6		6	
NOx Value	mg/kWh	28		43		44		33.86		62.60		38		53		48		48	
Flue Gas Mass G20 (Hi: 34.02 MJ/m^3)	g/sec	1.1	6.8	1.5	11.7	2.1	14.9	16.51	89.27	22.45	119.63	37.95	235.09	46.98	292.42	69.05	459.64	69.05	459.64
Water Flow (80/60°C)	m^3/h	0.44	2.79	0.63	4.96	0.83	6.13	1.474	8.405	2.089	11.622	3.585	23.39	4.391	28.628	6.42	42.795	6.42	85.59
Water Flow (50/30°C)	m^3/h	0.49	2.99	0.65	4.79	0.96	6.23	1.596	8.825	2.285	12.209	3.398	23.58	4.678	30.996	6.974	46.881	6.974	93.762
Hydraulic Loss (80/60°C)	kPa	14		28		43		13		25		12		12		14		14	
Hydraulic Loss (50/30°C)	kPa	14		28		43		13		25		12		12		14		14	
Gas Consumption G20 (Hi: 34.02 MJ/m^3) (80/60°C)	m^3/h	1.07	6.82	1.55	11.67	2.07	14.88	3.74	21.16	5.08	29.63	8.5	53.99	10.533	68.675	15.642	106.974	15.642	217.9
Gas Consumption G20 (Hi: 34.02 MJ/m^3) (50/30°C)	m^3/h	1.11	6.89	1.45	11.78	2.16	15.08	3.74	21.16	5.08	29.63	8.46	53.99	10.479	68.634	15.804	107.608	15.804	217.9
Max Gas Suppy Pressure G 20	mBar	21		21		21		21		21		21		21		21		21	
Min Gas Suppy Pressure G 20	mBar	17		17		17		17		17		17		17		17		17	
Flue Pressure	Pa	130		200		330		160		160		150		150		150		150 X 2	
Flue Connection Dimensition	Ø	Ø100		Ø100		Ø100		Ø200		Ø200		Ø250		Ø250		Ø250		Ø250x02	
Boiler Weight	kg	85		94		103		262		295		481		561		722		1378	

ALUBOX X-TREME TECHNICAL DATA

Type Of Product		ALUBOX X-TREME 250		ALUBOX X-TREME 300		ALUBOX X-TREME 350		ALUBOX X-TREME 430		ALUBOX X-TREME 535		ALUBOX X-TREME 640		ALUBOX X-TREME 700		ALUBOX X-TREME 880		ALUBOX X-TREME 1065	
General		min	max	min	max	min	max	min	max	min	max	min	max	min	max	min	max	min	max
Type Of Flue Installation		B23-C43 C53-C63-C83		B23-C43 C53-C63-C83		B23-C43 C53-C63-C83		B23-C43 C53-C63-C83		B23-C43 C53-C63-C83		B23-C43 C53-C63-C83		B23-C43 C53-C63-C83		B23-C43 C53-C63-C83		B23-C43 C53-C63-C83	
Nominal Heat Input Qn	**kw**	48	242	48	285	65	335	85	425	102	510	75	615	118.4	672.4	132.9	849.4	159.5	1025
Nominal Heat Output Pn at (80-60) °C	**kw**	46.8	237	46.8	279.50	63.7	328.3	82.50	416	99.9	499.8	73.8	601.4	111.9	650.4	124	824.5	152.9	999.9
Nominal Heat Output Pn at (50-30) °C	**kw**	51.4	254	51.4	302	70.2	351.7	91.60	445.9	107.1	540.6	81	641.4	127.6	70.2	142.3	885.1	171.9	1065.5
Water Operating Pressure	**bar**	0.8	6	0.8	6	0.8	6	0.8	6	0.8	6	0.8	6	0.8	6	0.8	6	0.8	6
Maxımum Operiation Temperature	**°C**	90		90		90		90		90		90		90		90		90	
Cut-off Temp. for Limit Termostad	**°C**	95		95		95		95		95		95		95		95		95	
Modulation Ratio		1:5		1:6		1:5		1:5		1:5		1:8		1:6		1:6		1:6	
Heating Efficiency (80-60) °C	**%**	95.98	98.06	96.06	98.18	96.26	98.04	96.75	97.94	97.11	98.23	96.98	97.91	96.38	97	96.79	97.71	96.88	97.65
Heating Efficiency (50-30) °C	**%**	108.11	105.25	107.61	106.24	107.06	106.21	107.96	105.03	107.64	106.11	107.47	106.42	108.12	104.82	107.52	104.58	108.18	104.85
Partial Load, Return 30°C (Direct Method)	**%**	107.64		107.49		107.52		107.56		107.38		107.55		108.76		108.66		108.4	
Flue Gas Temperature (80-60) °C	**°C**	56.1	69.2	55.8	71.8	57.8	68.7	59	69	57.7	69.5	58.1	67.9	60.2	73.5	59.4	69.5	59.6	68.7
Flue Gas Temperature (50-30) °C	**°C**	31.4	45.6	31.4	47.9	30.7	45.4	31.2	46.1	29.7	47.6	31	44.9	31.6	48.3	30.33	46.29	31.2	45
CO2 Emissions G20 (Hi: 34.02 MJ/m^3) 20mbar	**%**	8.92	8.9	8.91	8.97	9.11	9.16	9.6	9.15	8.69	8.91	8.83	9.13	8.91	9.09	9.05	9	8.92	9.1
NOx Class	**Class**	6		6		6		6		6		6		6		6		6	
NOx Value	**mg/kWh**	35		41		34		39		21		16		25		32		32	
Flue Gas Mass G20 (Hi: 34.02 MJ/m^3)	**g/sec**	22	110	22	127	31	154	40	201	47	238	39	271	54	308	60	389	73	467
Water Flow (80/60°C)	**m^3/h**	2.032	10.213	1.995	12.07	2.865	14.653	3.541	18.238	4.219	21.752	3.44	26.251	5.54	30.31	5.42	33.6	6.56	42.66
Water Flow (50/30°C)	**m^3/h**	2.192	10.872	2.192	12.852	3.052	15.2	3.941	19.286	5.281	23.454	3.935	28.389	5.5	30.5	6.17	38.07	7.27	45.87
Hydraulic Loss (80/60°C)	**kPa**	11.1		13.08		19		24.02		24.8		24.284		22.72		17.7		21.2	
Hydraulic Loss (50/30°C)	**kPa**	11.1		13.08		19		24.02		24.8		24.284		22.72		23.04		24.8	
Gas Consumption G20 (Hi: 34.02 MJ/m^3) (80/60°C)	**m^3/h**	4.94	25.47	4.82	30	6.93	35.23	8.84	44.6	10.75	53.47	8.45	64.52	12.09	69.82	13.35	87.9	16.44	106.57
Gas Consumption G20 (Hi: 34.02 MJ/m^3) (50/30°C)	**m^3/h**	4.85	25.47	4.83	30.08	6.89	34.6	8.76	44.35	11.63	53.91	8.69	64.13	14	69.8	13.84	88.48	16.62	106.34
Max Gas Suppy Pressure G 20	**mBar**	21		21		21		21		21		21		21		21		21	
Min Gas Suppy Pressure G 20	**mBar**	17		17		17		17		17		17		17		17		17	
Flue Pressure	**Pa**	60		60		60		71		78		195		220		179		252	
Flue Connection Dimensition	**Ø**	Ø200		Ø200		Ø250		Ø250		Ø250		Ø250		Ø250		Ø250		Ø250	
Boiler Weight	**kg**	280		280		351		381		415		446		485		574		640	

Type Of Product		ALUBOX X-TREME 1315		ALUBOX X-TREME 1460		ALUBOX X-TREME 1550		ALUBOX X-TREME 1760		ALUBOX X-TREME 2630		ALUBOX X-TREME 2920		ALUBOX X-TREME 3100	
General		min	max	min	max	min	max	min	max	min	max	min	max	min	max
Type Of Flue Installation		B23-C43 C53-C63-C83		B23-C43 C53-C63-C83		B23-C43 C53-C63-C83		B23-C43 C53-C63-C83		B23-C43 C53-C63-C83		B23-C43 C53-C63-C83		B23-C43 C53-C63-C83	
Nominal Heat Input Qn	**kw**	220	1261	250	1400	250	1490	132.9	1698.8	220	2522	250	2800	250	2980
Nominal Heat Output Pn at (80-60) °C	**kw**	212	1220	246	1360	243	1454	124	1649	212	2440	246	2720	243	2908
Nominal Heat Output Pn at (50-30) °C	**kw**	235	1315	268	1460	268	1555	142.3	1770.2	235	2630	268	2920	268	3110
Water Operating Pressure	**bar**	0.8	6	0.8	6	0.8	6	0.8	6	0.8	6	0.8	6	0.8	6
Maximum Operiation Temperature	**°C**	90		90		90		90		90		90		90	
Cut-off Temp. for Limit Termostad	**°C**	95		95		95		95		95		95		95	
Modulation Ratio		1:6		1:5		1:6		1:12		1:11		1:11		1:12	
Heating Efficiency (80-60) °C	**%**	96.5	97.3	97.07	97.36	97.07	97.26	96.79	97.71	96.5	97.3	97.07	97.36	97.07	97.26
Heating Efficiency (50-30) °C	**%**	107.18	104.72	107.4	104.56	107.4	104.43	107.52	104.58	107.18	104.72	107.4	104.56	107.4	104.43
Partial Load, Return 30°C (Direct Method)	**%**	108		108.14		108.04		108.66		108		108.14		108.04	
Flue Gas Temperature (80-60) °C	**°C**	59.6	68.7	59.8	67.3	59.8	67.5	59.4	69.5	59.6	68.7	59.8	67.3	59.8	67.5
Flue Gas Temperature (50-30) °C	**°C**	46.7	31.1	30.8	42	30.8	43.1	30.33	46.29	46.7	31.1	30.8	42	30.8	43.1
CO2 Emissions G20 (Hi: 34.02 MJ/m³) 20mbar	**%**	8.55	9.38	8.85	8.91	9.07	9.11	9.05	9	8.55	9.38	8.85	8.91	9.07	9.11
NOx Class	**Class**	6		6		6		6		6		6		6	
NOx Value	**mg/kWh**	40		31		37		32		40		31		37	
Flue Gas Mass G20 (Hi: 34.02 MJ/m³)	**g/sec**	104	556	112	622	112	668	60	389	104	556	112	622	112	668
Water Flow (80/60°C)	**m³/h**	9.22	51.14	10.25	56.36	10.25	60.91	6.17	38.07	9.22	51.14	10.25	56.36	10.25	60.91
Water Flow (50/30°C)	**m³/h**	9.22	51.14	10.3	56.4	10.32	60.92	6.17	38.1	9.22	51.14	10.3	56.4	10.32	60.92
Hydraulic Loss (80/60°C)	**kPa**	24.9		26		31.5		23.04		24.9		26		31.5	
Hydraulic Loss (50/30°C)	**kPa**	24.9		26		31.5		23.04		24.9		26		31.5	
Gas Consumption G20 (Hi: 34.02 MJ/m³) (80/60°C)	**m³/h**	22.66	129.63	25.48	138.95	25.48	149.36	13.35	87.9	22.66	129.63	25.48	138.95	25.48	149.36
Gas Consumption G20 (Hi: 34.02 MJ/m³) (50/30°C)	**m³/h**	22.70	129.8	25.5	138.96	25.48	149.36	13.37	87.9	22.70	129.8	25.5	138.96	25.48	149.36
Max Gas Suppy Pressure G 20	**mBar**	21		21		21		21		21		21		21	
Min Gas Suppy Pressure G 20	**mBar**	17		17		17		17		17		17		17	
Flue Pressure	**Pa**	220		243		268		2 x 179		2 x 220		2 x 243		2 x 268	
Flue Connection Dimensition	**Ø**	Ø250		Ø250		Ø250		Ø250		Ø250		Ø250		Ø250	
Boiler Weight	**kg**	780		850		850		1120		1560		1700		1700	

ALUCON TECHNICAL DATA

Type Of Product		ALUCON 50		ALUCON 70		ALUCON 90		ALUCON 115		ALUCON 125		ALUCON 150	
General		min	max	min	max	min	max	min	max	min	max	min	max
Type Of Flue Installation		B23-B53-C53-C13 C33-C43-C63-C83		B23-B53-C53-C13 C33-C43-C63-C83		B23-B53-C53-C13 C33-C43-C63-C83		B23-B53-C53-C13 C33-C43-C63-C83		B23-B53-C53-C13 C33-C43-C63-C83		B23-B53-C53-C13 C33-C43-C63-C83	
Nominal Heat Input Qn	**kw**	7.6	49.2	10.2	65.6	14.9	88.3	14.9	112.3	19.9	123.5	19.9	143.1
Nominal Heat Output Pn at (80-60) °C	**kw**	7.3	47.8	9.9	63.4	14.3	86.3	14.3	109.5	19.2	120.8	19.2	139.82
Nominal Heat Output Pn at (50-30) °C	**kw**	8.4	51.4	11.6	68.5	15.1	91	15.1	118.1	22.3	128	22.3	149.1
Water Operating Pressure	**bar**	0.8	6	0.8	6	0.8	6	0.8	6	0.8	6	0.8	6
Maxımum Operiation Temperature	**°C**	85		85		85		85		85		85	
Cut-off Temp. for Limit Termostad	**°C**	95		95		95		95		95		95	
Modulation Ratio		1:6		1:6		1:6		1:8		1:6		1:7	
Heating Efficiency (80-60) °C	**%**	96.87	97.66	96.69	97.22	96.79	98.42	96.79	98.16	97.03	98.28	97.03	98.19
Heating Efficiency (50-30) °C	**%**	108	105.89	107.98	103.88	108.19	104.97	108.19	104.79	108.14	104.4	108.14	103.22
Partial Load, Return 30°C (Direct Method)	**%**	108.56		108.39		108.52		108.65		108.46		108.37	
Flue Gas Temperature (80-60) °C	**°C**	54.7	65.6	55.4	72.1	56.8	61.4	56.8	64.9	56.9	61.8	56.9	70.3
Flue Gas Temperature (50-30) °C	**°C**	29.5	45.1	30.1	52.3	30.2	44.88	30.2	53.5	30.5	44.9	30.5	47.1
CO2 Emissions G20 (Hi: 34.02 MJ/m³) 20mbar	**%**	9.32	9.36	9.05	9.61	9.44	9.33	9.44	9.36	9.54	9.49	9.54	9.56
NOx Class	**Class**	6		6		6		6		6		6	
NOx Value	**mg/kWh**	37		28		39		43		46		44	
Flue Gas Mass G20 (Hi: 34.02 MJ/m³)	**g/sec**	3	22	5	28	6	39	6	49	9	54	9	63
Water Flow (80/60°C)	**m³/h**	0.32	2.08	0.44	2.79	0.63	3.81	0.63	4.96	0.83	5.3	0.83	6.13
Water Flow (50/30°C)	**m³/h**	0.36	2.22	0.49	2.99	0.65	3.83	0.65	4.79	0.96	5.44	0.96	6.23
Hydraulic Loss (80/60°C)	**kPa**	14		14		17.5		28		33		43	
Hydraulic Loss (50/30°C)	**kPa**	14		14		17.5		28		33		43	
Gas Consumption G20 (Hi: 34.02 MJ/m³) (80/60°C)	**m³/h**	0.79	5.11	1.07	6.82	1.55	9.18	1.55	11.67	2.07	12.84	2.07	14.88
Gas Consumption G20 (Hi: 34.02 MJ/m³) (50/30°C)	**m³/h**	0.81	5.07	1.11	6.89	1.45	9.06	1.45	11.78	2.16	12.8	2.16	15.08
Max Gas Suppy Pressure G 20	**mBar**	21		21		21		21		21		21	
Min Gas Suppy Pressure G 20	**mBar**	17		17		17		17		17		17	
Flue Pressure	**Pa**	100		130		170		200		220		330	
Flue Connection Dimensition	**Ø**	Ø100		Ø100		Ø100		Ø100		Ø100		Ø100	
Boiler Weight	**kg**	67		67		77		77		91		91	

Type Of Product		WALLCON X-TREME 42		WALLCON X-TREME 50		WALLCON X-TREME 67		WALLCON X-TREME 115		WALLCON X-TREME 125		WALLCON X-TREME 150	
General		min	max	min	max	min	max	min	max	min	max	min	max
Type Of Flue Installation		B23-C53-C13 C33-C43-C63-C83		B23-C53-C13 C33-C43-C63-C83		B23-C53-C13 C33-C43-C63-C83		B23-C53-C43-C63-C83		B23-C53-C43-C63-C83		B23-C53-C43-C63-C83	
Nominal Heat Input Qn	**kw**	7.2	39.4	8.4	48	11.2	63	27	108.5	17	121	21	143
Nominal Heat Output Pn at (80-60) °C	**kw**	7	38.3	8.10	46.3	11	61	26.1	105.4	16.6	116.2	19.5	138
Nominal Heat Output Pn at (50-30) °C	**kw**	7.60	41.4	8.9	50.1	12	67	29.3	115.5	18.4	126	22.7	150
Water Operating Pressure	**bar**	0.8	3	0.8	3	0.8	4.5	0.8	6	0.8	6	0.8	6
Maxımum Operiation Temperature	**°C**	80		80		80		80		80		80	
Cut-off Temp. for Limit Termostad	**°C**	105		105		105		105		105		105	
Modulation Ratio		1:5		1:6		1:6		1:4		1:7		1:7	
Heating Efficiency (80-60) °C	**%**	97.04	97.82	96.86	97.58	97.99	98.8	97.31	97.26	95.27	97.09	96.49	97.68
Heating Efficiency (50-30) °C	**%**	105.63	104.94	105.76	104.3	107.08	106.35	107.19	106.53	106.11	106.19	106.49	105.3
Partial Load, Return 30°C (Direct Method)	**%**	108.21		108.29		108.09		108		108		108.34	
Flue Gas Temperature (80-60) °C	**°C**	63.5	65.3	64.8	66.6	56.9	69.9	58.9	78.3	57.6	80.1	62.9	83
Flue Gas Temperature (50-30) °C	**°C**	40.4	42.1	43.4	46.5	35.1	47.7	33.6	40.6	32.1	42.2	38.1	65.8
CO2 Emissions G20 (Hi: 34.02 MJ/m^3) 20mbar	**%**	8.9	9.1	9	9.3	8.6	9.1	9.1	9.1	9.1	9.1	9.4	9.8
NOx Class	**Class**	6		6		6		6		6		6	
NOx Value	**mg/kWh**	42		25		24		24		35		41	
Flue Gas Mass G20 (Hi: 34.02 MJ/m^3)	**g/sec**	3	17	4	21	5	28	12	47	8	49	9	60
Water Flow (80/60°C)	**m^3/h**	0.3	1.6	0.3	1.9	0.49	2.6	1.09	4.3	0.648	4.75	0.855	5.808
Water Flow (50/30°C)	**m^3/h**	0.3	1.6	0.3	2.1	0.49	2.8	1.2	5.1	0.767	5.25	0.924	6.039
Hydraulic Loss (80/60°C)	**kPa**	30		40		44		40		41		39	
Hydraulic Loss (50/30°C)	**kPa**	30		40		44		40		41		39	
Gas Consumption G20 (Hi: 34.02 MJ/m^3) (80/60°C)	**m^3/h**	0.8	3.8	0.8	4.7	1.3	6.1	2.65	10.7	1.66	11.42	2.12	14.19
Gas Consumption G20 (Hi: 34.02 MJ/m^3) (50/30°C)	**m^3/h**	0.8	3.8	0.9	4.8	1.3	6.4	2.71	11.15	1.7	12.05	2.05	14.2
Max Gas Suppy Pressure G 20	**mBar**	21		21		21		21		21		21	
Min Gas Suppy Pressure G 20	**mBar**	17		17		17		17		17		17	
Flue Pressure	**Pa**	100		140		170		200		190		310	
Flue Connection Dimensition	**Ø**	Ø80		Ø80		Ø80		Ø100		Ø100		Ø100	
Boiler Weight	**kg**	48		48		53		95		95		106	

Gassero

technology for your comfort

GASSERO ISI TEKNOLOJİLERİ SAN. LTD. ŞTİ.

İstanbul Endüstri ve Ticaret Serbest Bölgesi (Freezone)
4. Sok. No: 8 34957 Tuzla - ISTANBUL / TURKEY
P: +90 (216) 394 09 85
F: +90 (216) 394 24 91
E-mail: export@gassero.com
www.gassero.com